Design and experimental demonstration of Mach-Zehnder modulation system

The authors of MZM paper:

Kohei Yamamoto, Keiko Kokeyama, Yuta Michimura, Yutaro Enomoto, Masayuki Nakano, Guiguo Ge, TomoyukiUehara, Kiwamu Izumi, Osamu Miyakawa, TakahiroYamamoto, Takaaki Yokozawa, Yuta Fujikawa, NobuyukiFujii, Takaaki Kajita

Content

- Why use MZM
- Simulation
- Experiment
  *Modulation index measurement
  *Displacement noise measurement
- Future plan

Why use MZM

KAGRA Main Interferometer (Main IFO)

Optical configuration called **Resonant Sideband Extraction** (RSE)

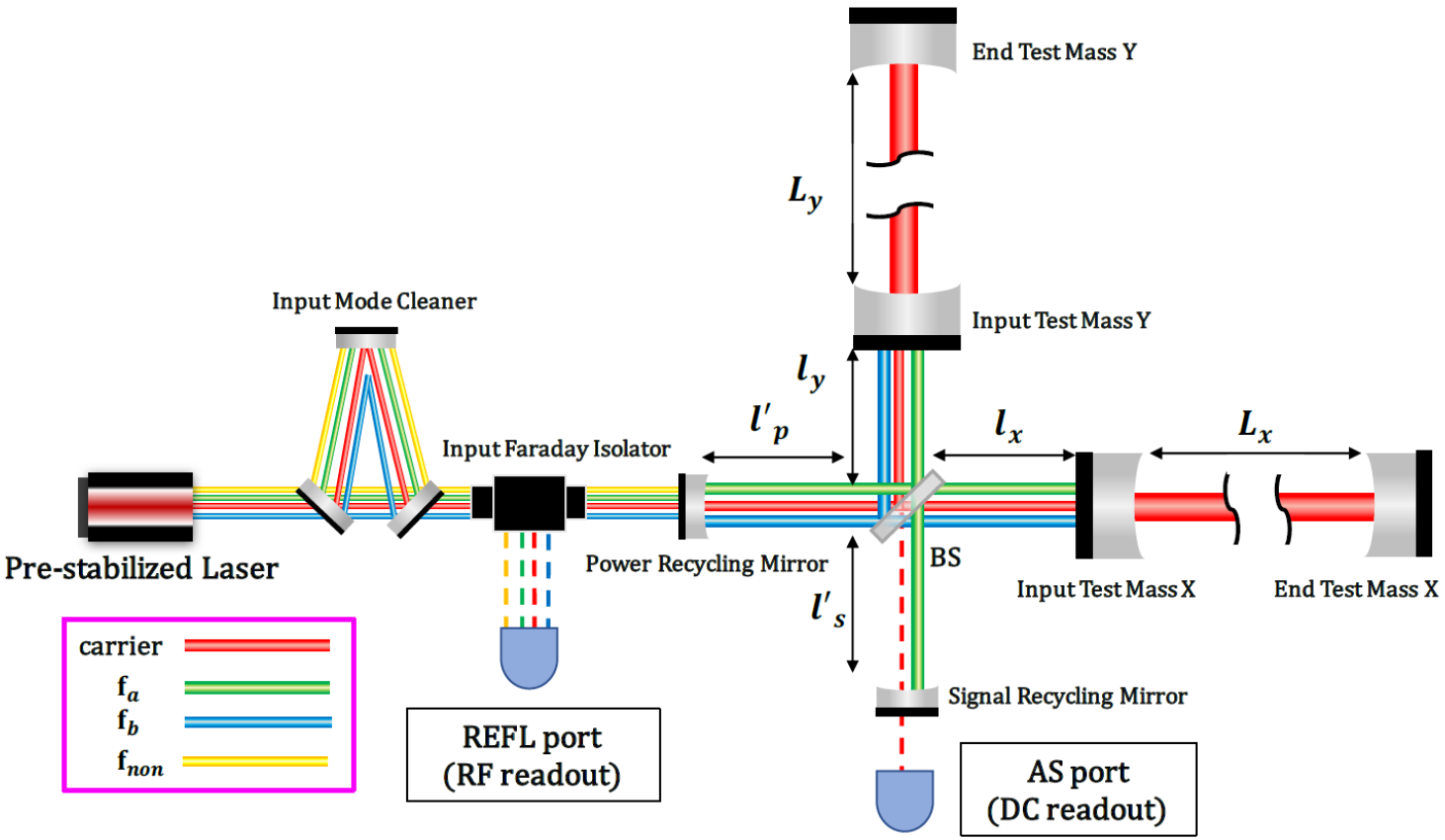

Have **5** longitudinal **Degrees of Freedom** to be controlled to operate the IFO as a GW detector

5 DOFs

- ARM:
  CARM : FP common length
  DARM : FP differential length

- Center:
  MICH : Central Michelson
  PRCL : PR cavity length
  SRCL : SR cavity length

KAGRA Main Interferometer (Main IFO)

Optical configuration called **Resonant Sideband Extraction** (RSE)

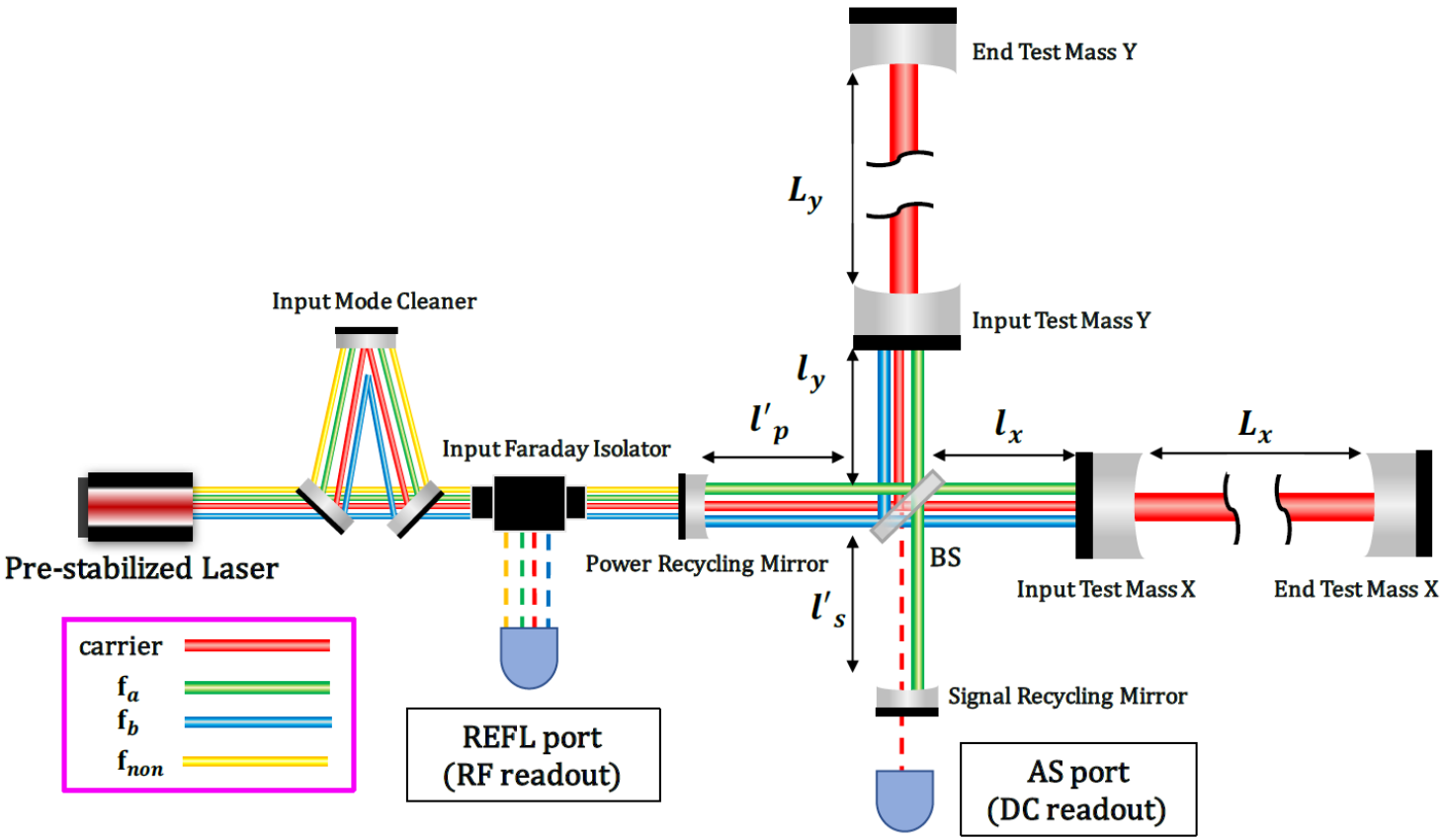

To obtain error signals of 5 DOFs, RF sidebands are necessary

	Frequency [MHz]	Resonant
fa/f1	16.88	PRC&SRC
fb/f2	45.02	PRC

Why use Mach-Zehnder Modulator (MZM)?

The primary target of KAGRA: Binary neutron star merger events, around 100Hz

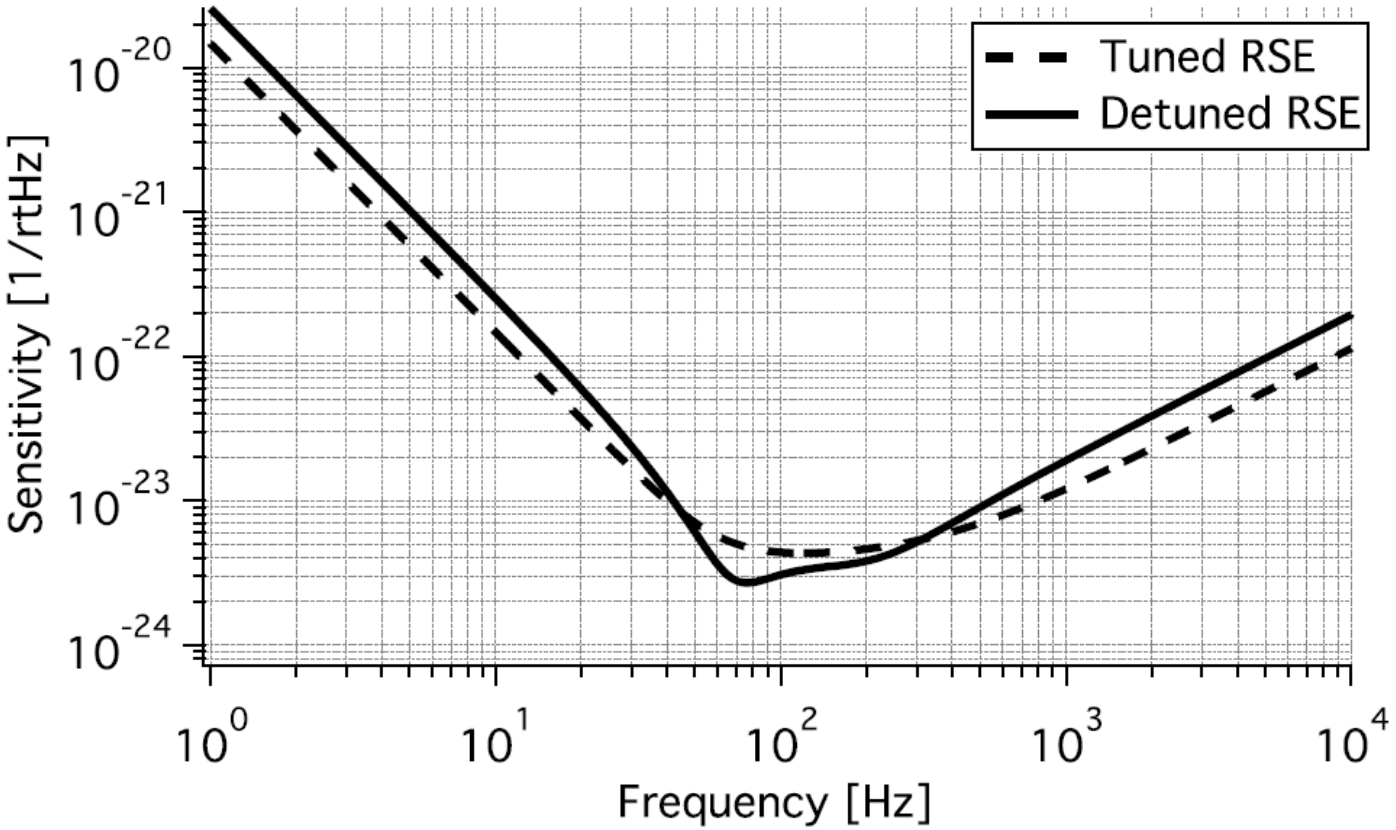

RSE: limited by quantum noise

The operation mode can be switched from **RSE** to **DRSE** by adding an offset to the SRCL error signal.

Detuned RSE (DRSE): release the quantum limit

- **Advantage:** increase the observation rate of Binary neutron star merger events
- **Disadvantage**: increase the couplings of noise includes **photo-detector noise** (PDN) and **oscillator phase noise** (OPN).

[Reference] : Class. Quantum Grav. 31 (2014) 095003

Why use Mach-Zehnder Modulator (MZM)?

- PDN/OPN originate from the tilt of upper and lower f1 sidebands.
- Solution: compensate the tilt by adding f1 amplitude modulation sidebands beforehand

Using an additional amplitude modulation (AM) sidebands to address the increased coupling of the PDN and OPN.

Mach-Zehnder Modulator (MZM) is one candidate to achieve this

MZI Modulation system

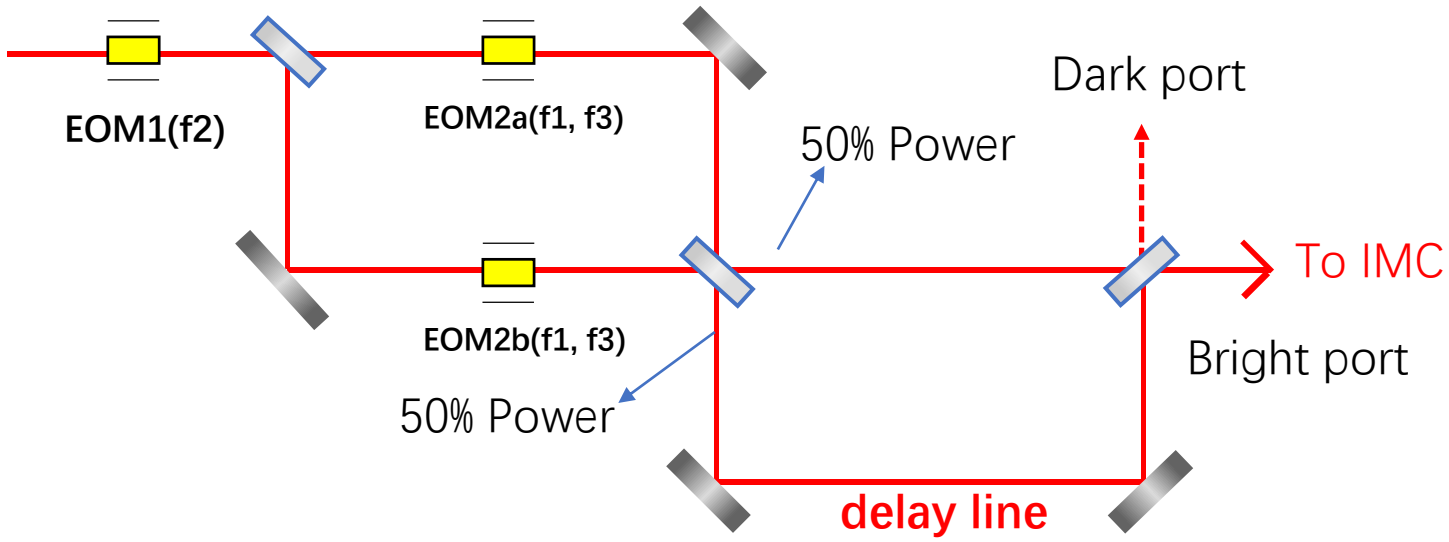

Schematic view

Sidebands generated by MZM

	Frequency [MHz]	Modulation type
f1	16.88	PM and AM
f2	45.02	PM
f3	56.27	AM

1st MZI is locked at Mid-fringe

2nd MZI is locked at Dark-fringe

One more Advantage (f3 AM) : **remove the signal couplings b/w the arm and center region of the main interferometer**

MZI Modulation system

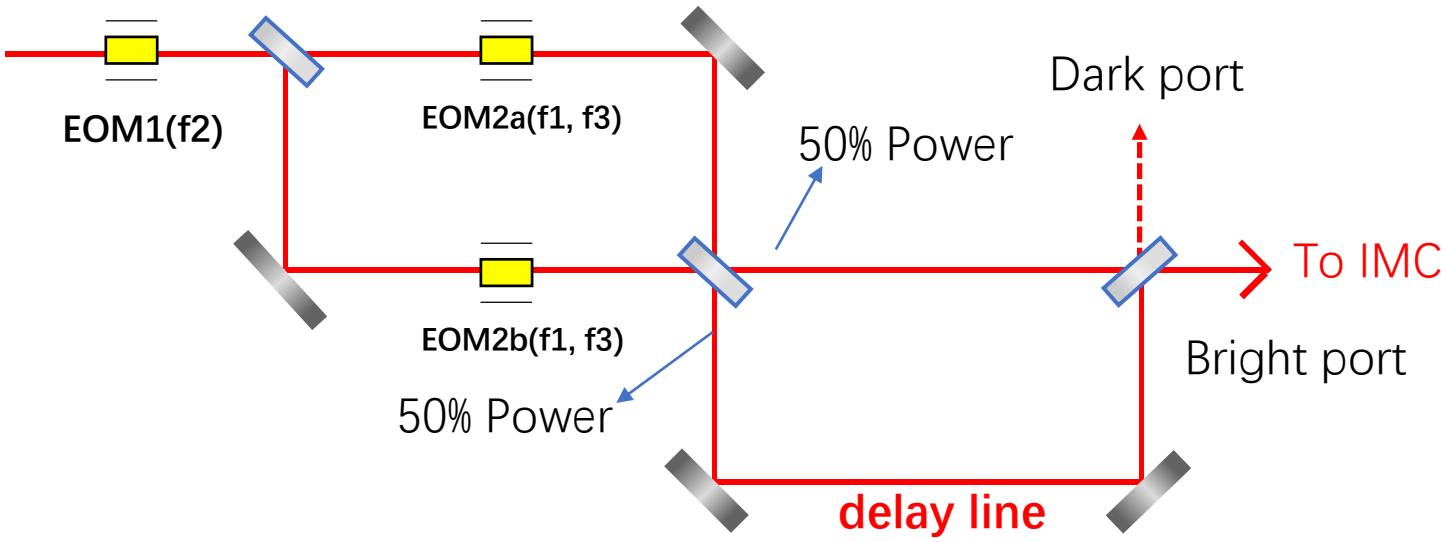

Sidebands generated by MZM

	Frequency [MHz]	Resonant
f1	16.88	PRC&SRC
f2	45.02	PRC
f3	56.27	Not resonant

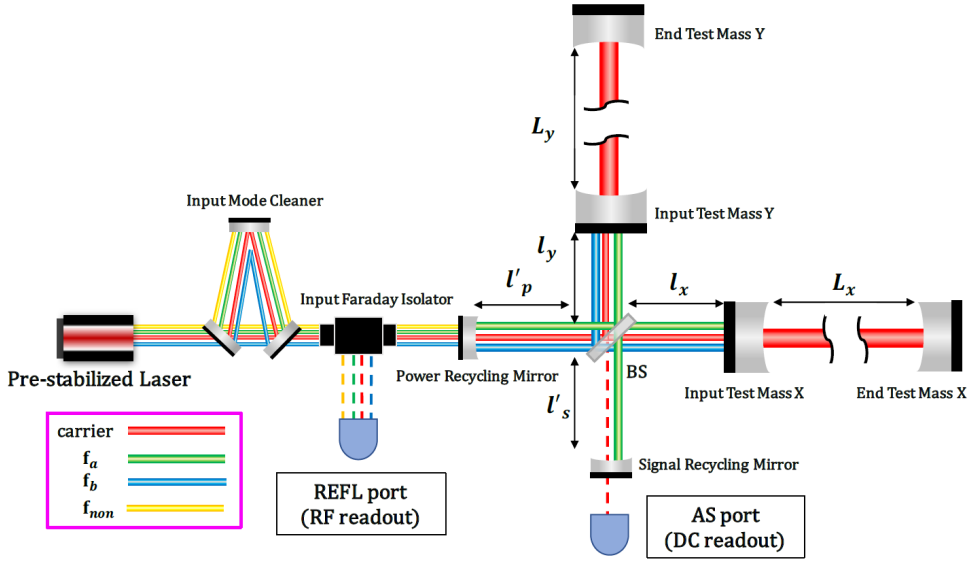

One more Advantage （f3 AM）: **remove the signal couplings b/w the arm and center region of the main interferometer**

Modulation index

For a certain modulation frequency, field after MZM can be shown as:

$$E_{out} = E_0 e^{i\omega t}[1 + \Gamma \sin(\frac{\phi}{2}) \sin(\frac{\theta}{2}) \cos(\Omega_m t + \frac{\theta + \phi - \pi}{2})$$
$$+ i\Gamma \cos(\frac{\phi}{2}) \cos(\frac{\theta}{2}) \cos(\Omega_m t + \frac{\theta + \phi - \pi}{2})]$$

1st term: carrier field
2nd term: AM component
3rd term: PM component

ϕ is the phase difference applied between EOMs

θ is the phase difference introduced by delay-line,
delay-line = 2.66m, f3 only has AM component

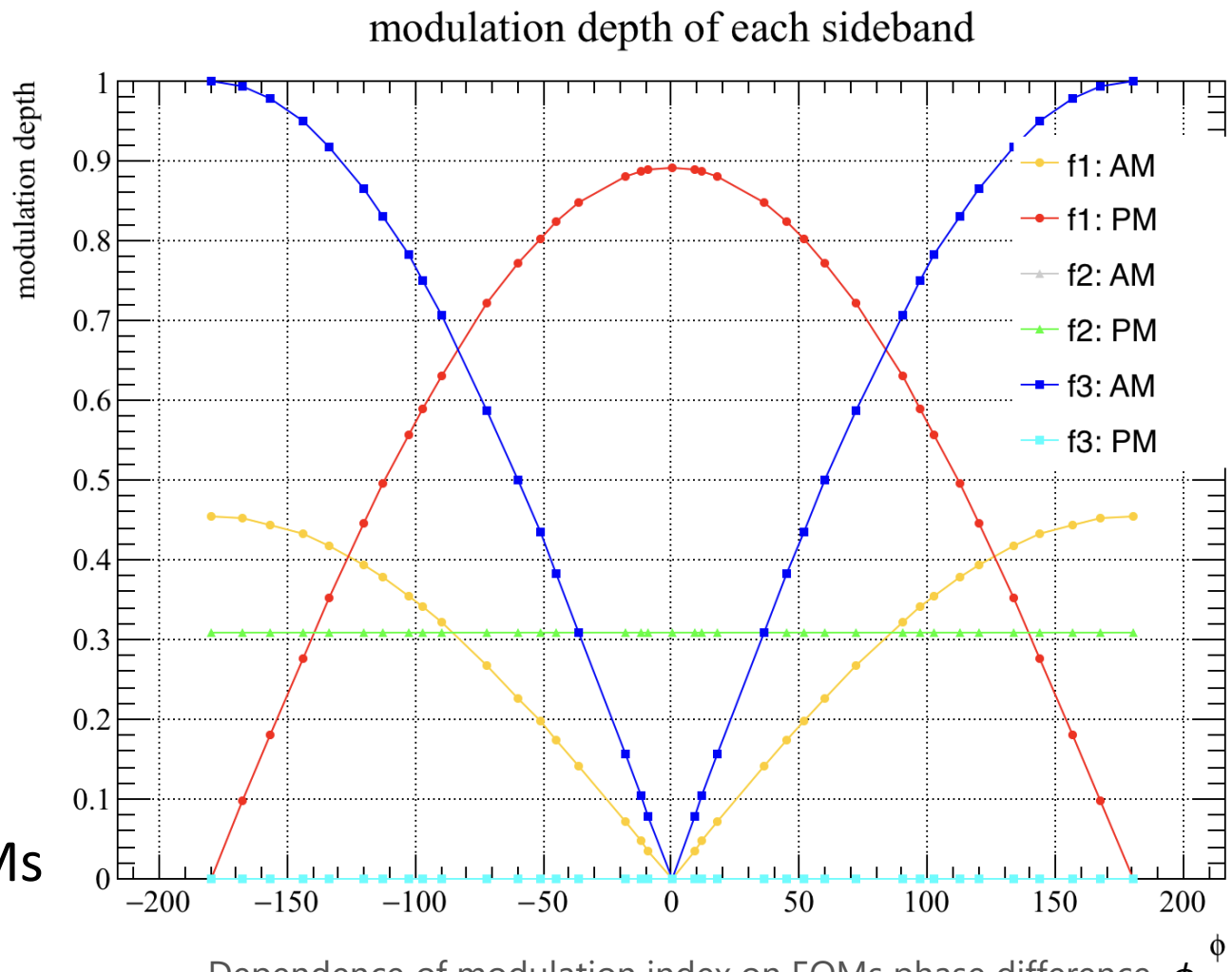

Dependence of modulation index on EOMs phase difference ϕ

Simulation

Displacement noise requirement

Displacement of optical paths in the MZIs is converted into sideband amplitude and phase noises ,and in the end, these noises couple into the DC fluctuation at the AS port (GW signal).

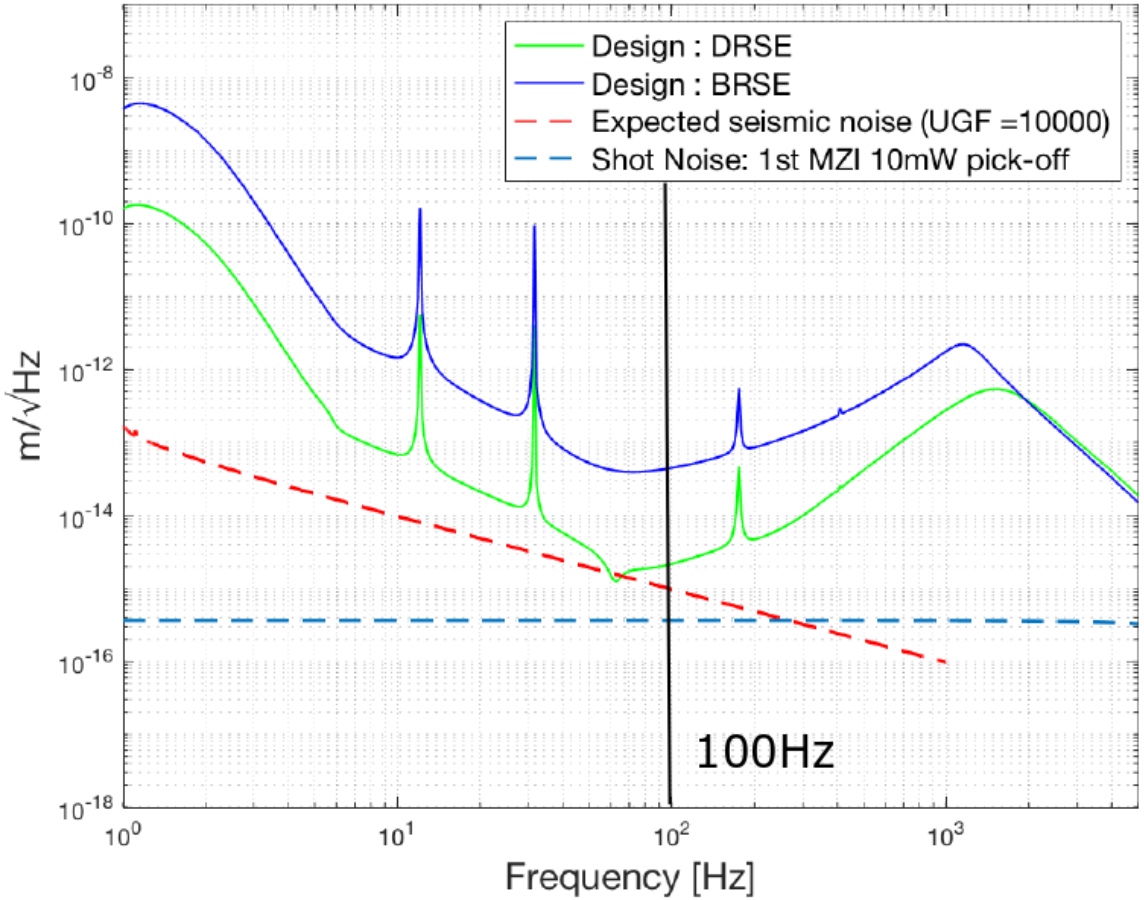

(a) 1st MZI

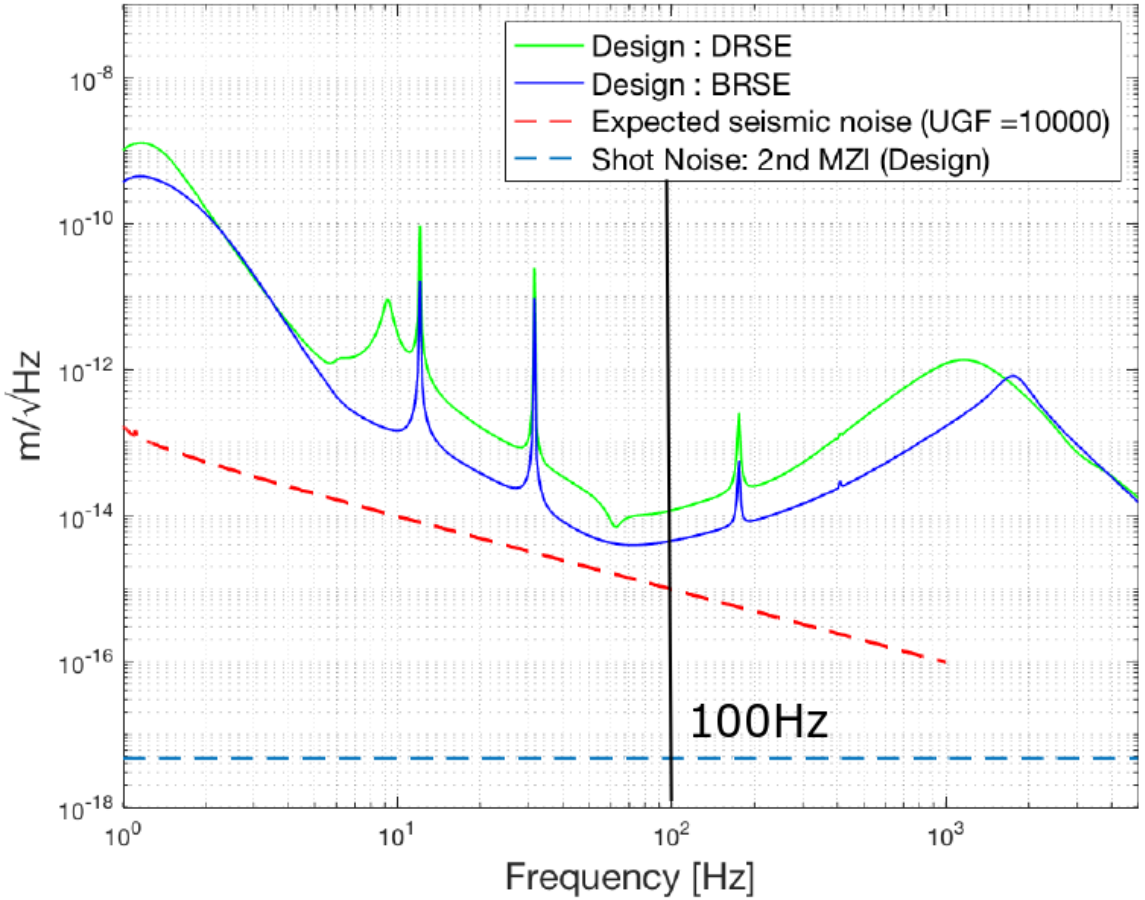

(b) 2nd MZI

Calculate by Yamakoh, code is Optickle

Experiment

Installation on the input optics

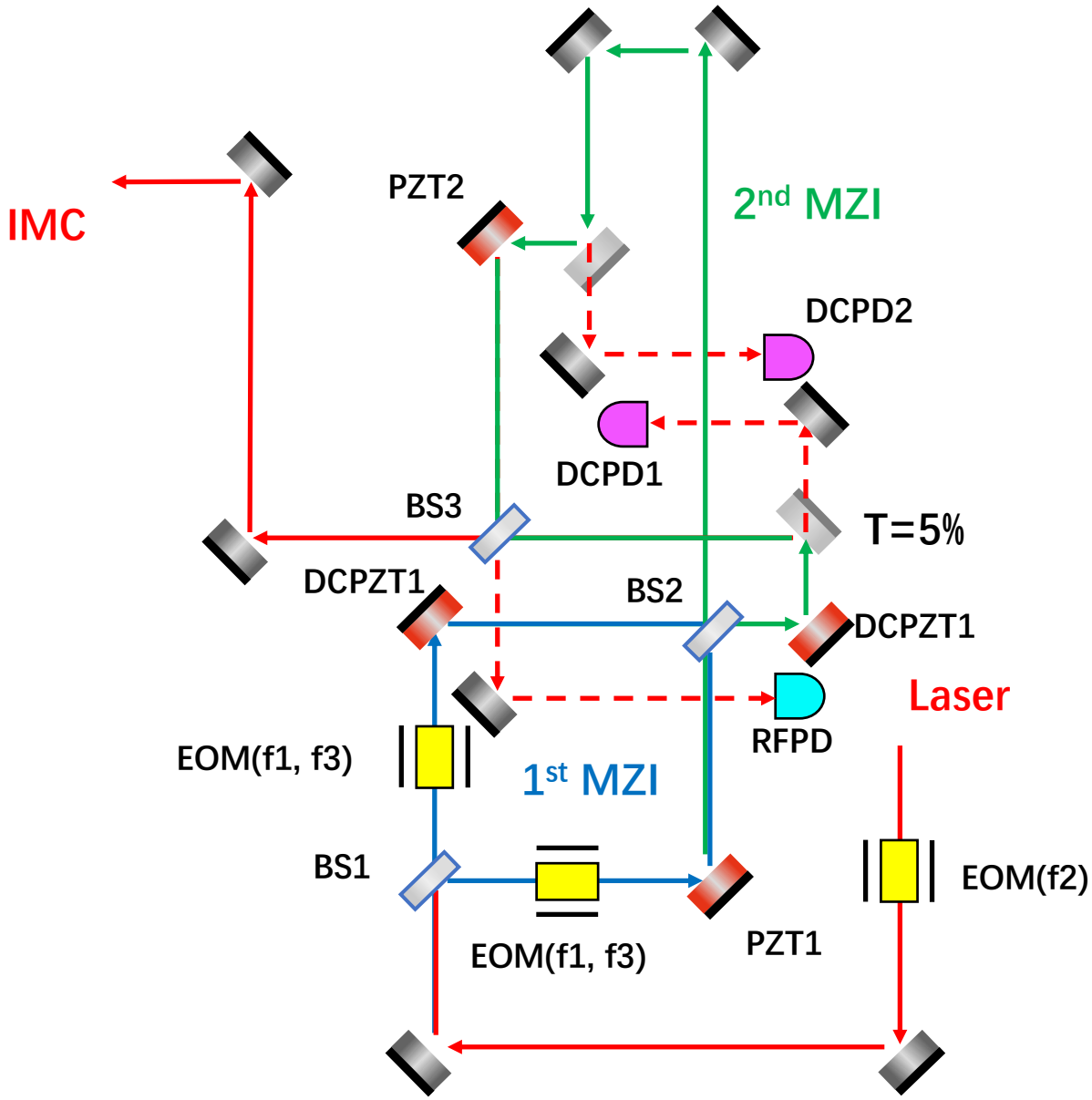

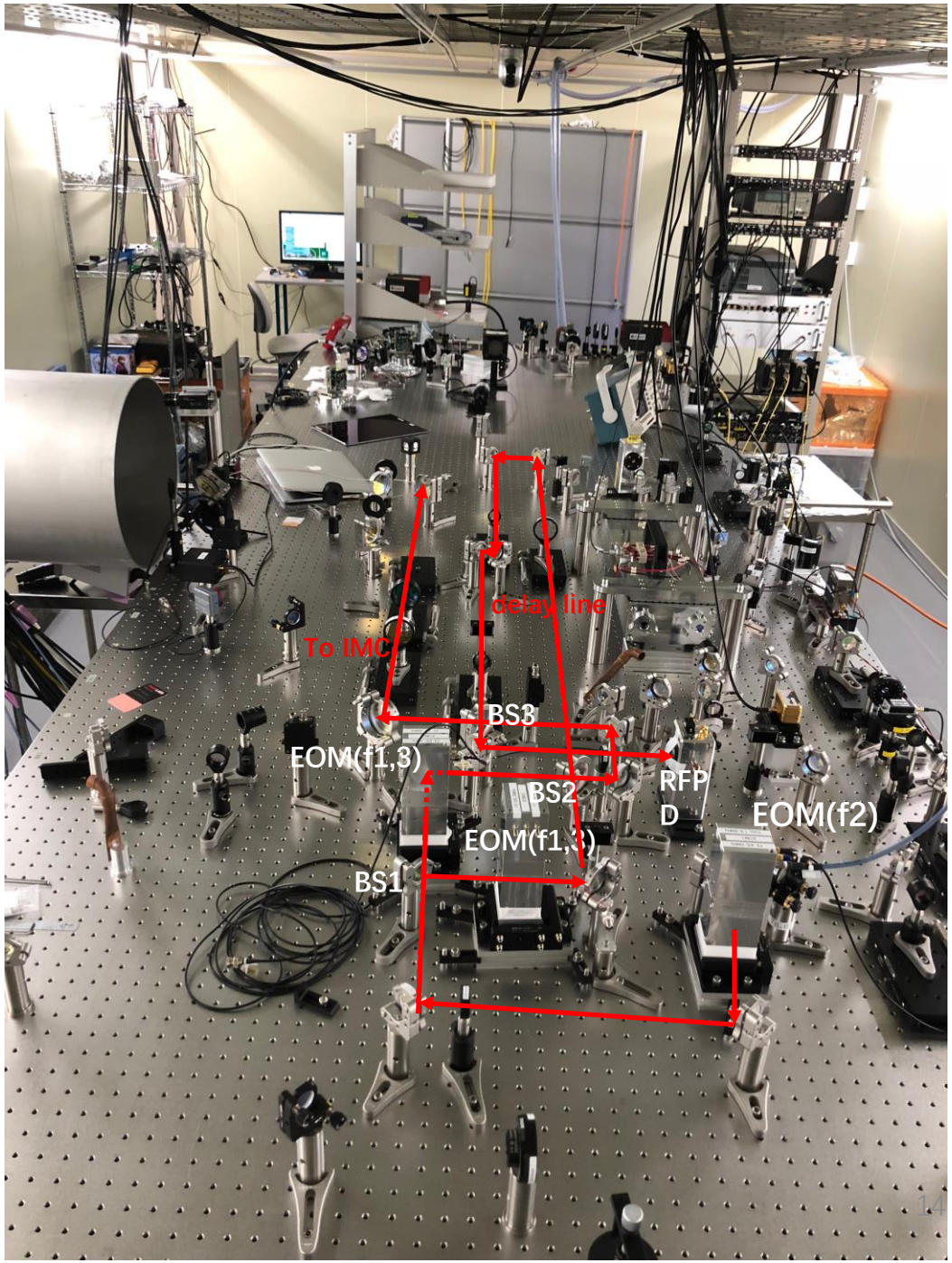

Installation on the input optics

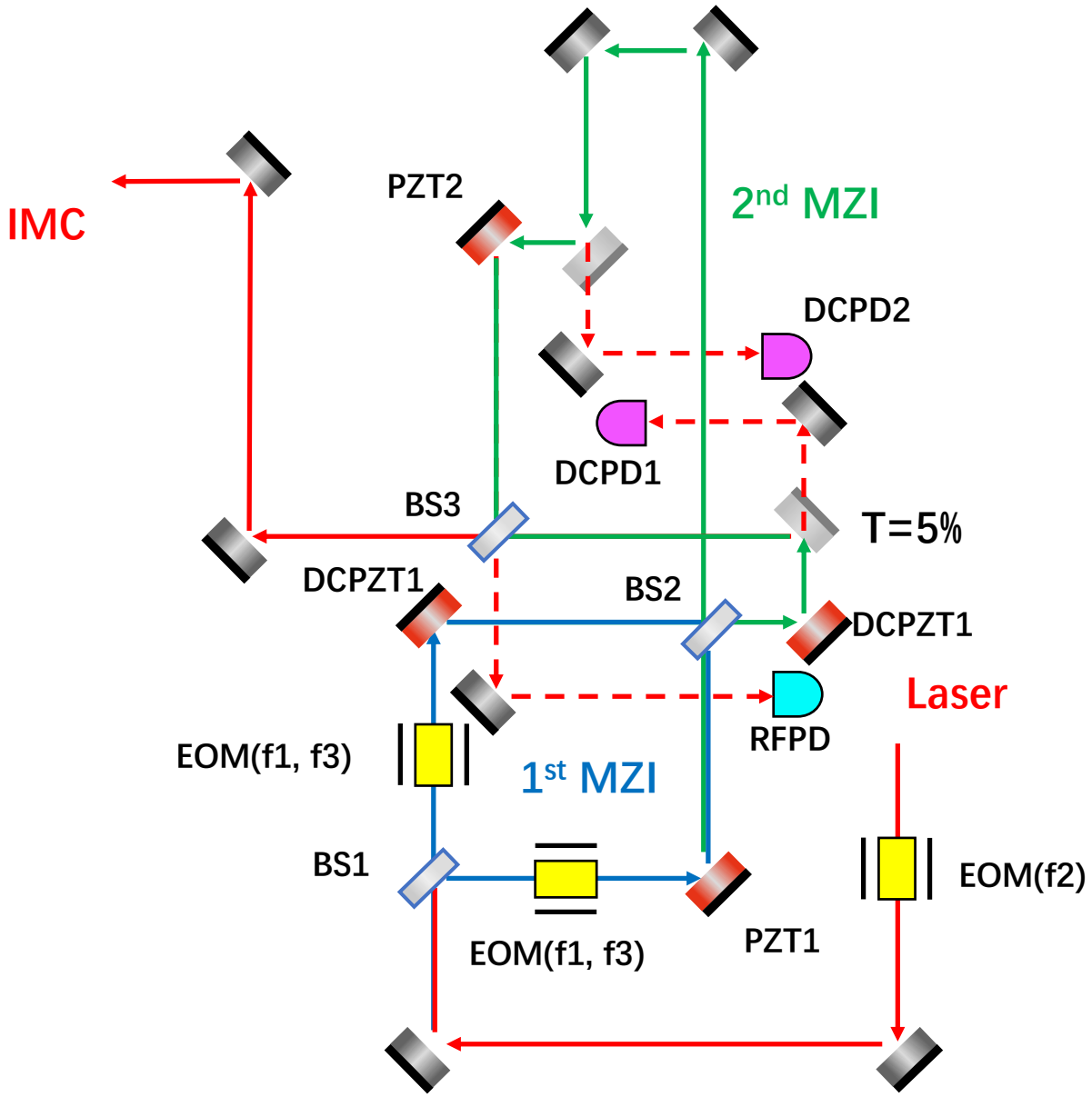

- Servo: Common mode servo
- PZT: 2 PZTs for each MZI
- Connected to KAGRA digital system
- Automatically controlled by guardian

Control

Fully commissioned including automation

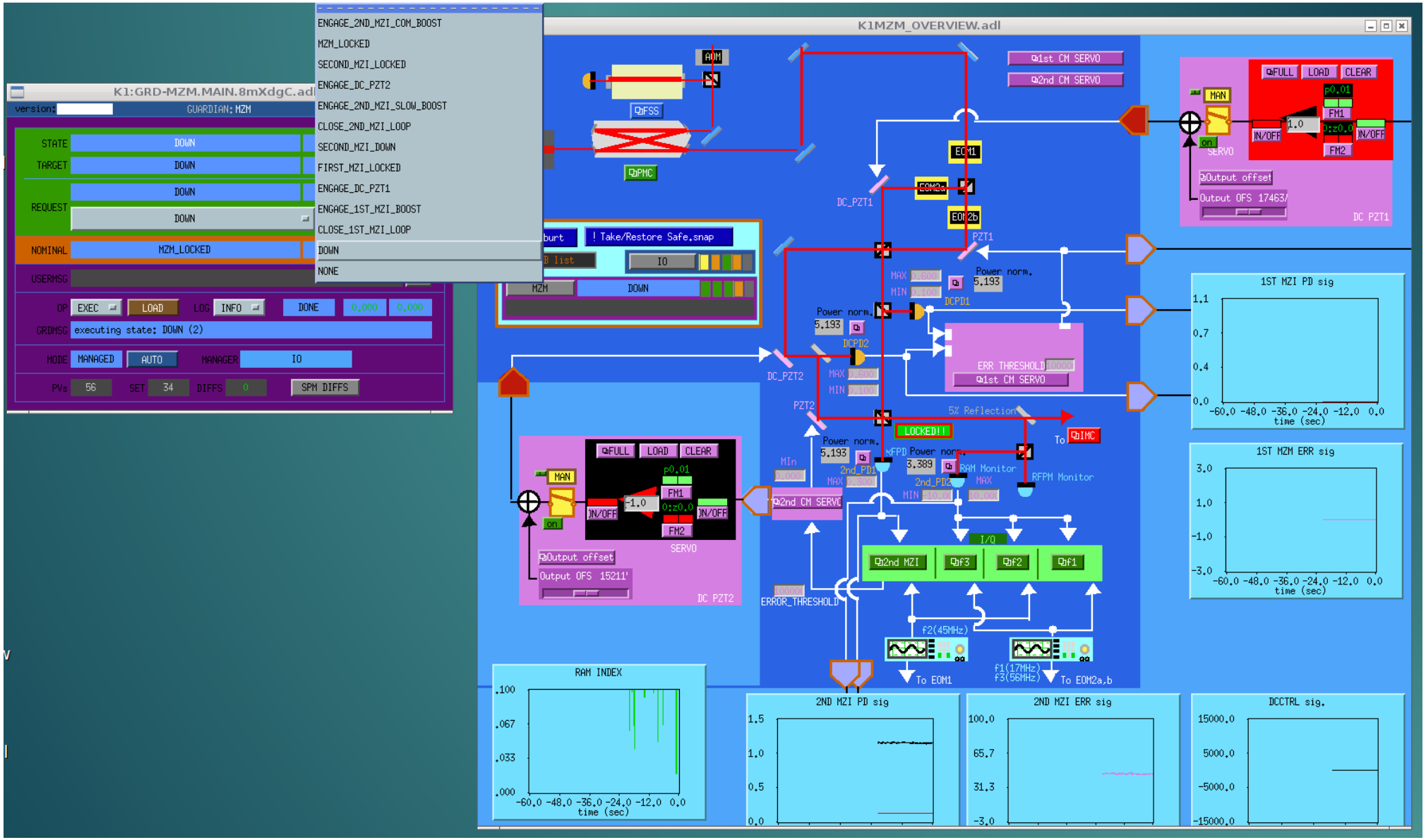

Both 2 MZIs can be locked by guardian remotely

Modulation index measurement

System of Modulation index Measurement

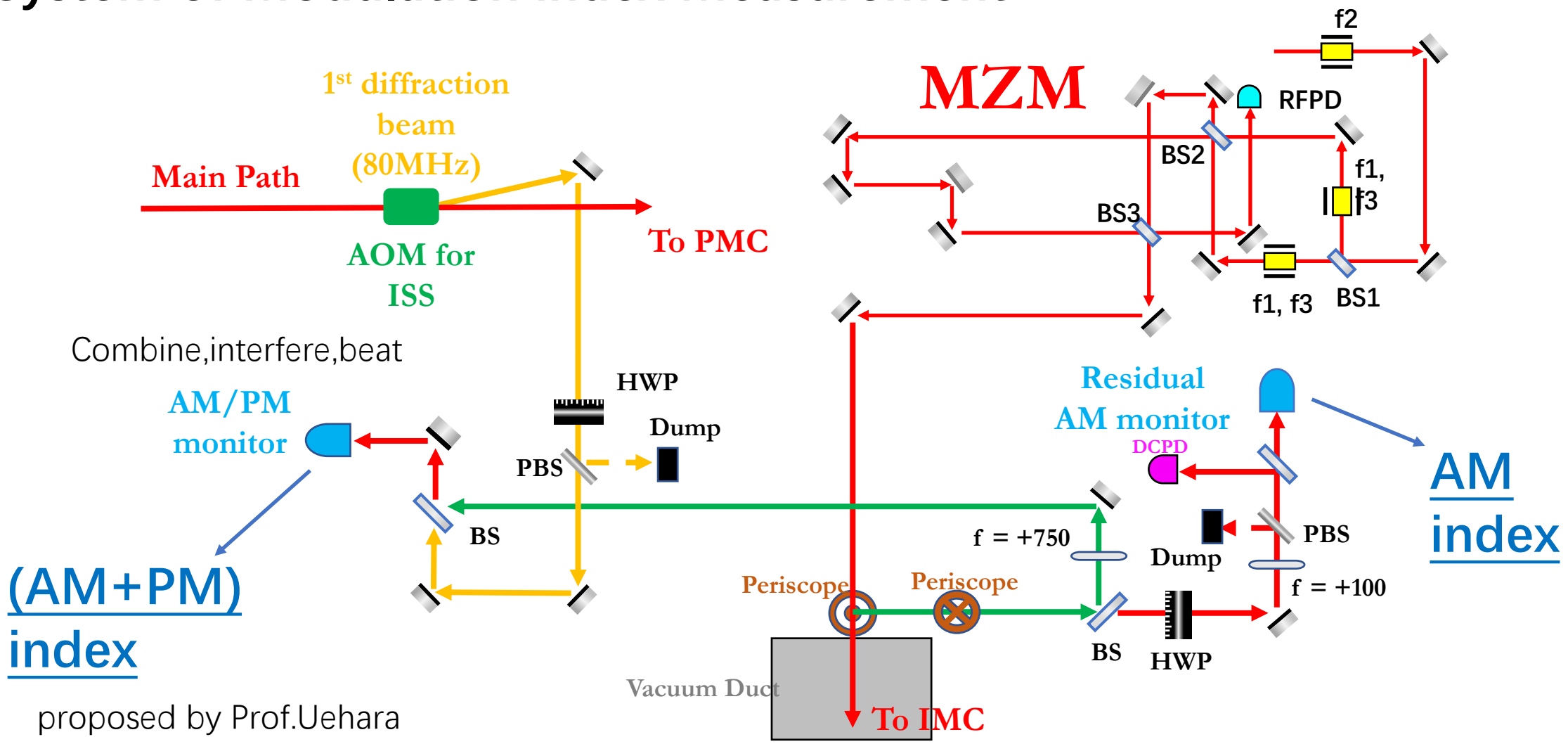

proposed by Prof.Uehara

https://gwdoc.icrr.u-tokyo.ac.jp/cgi-bin/private/DocDB/ShowDocument?docid=9602

Modulation index measurement

calibrate the measurements of AM & PM monitor into AM & PM index

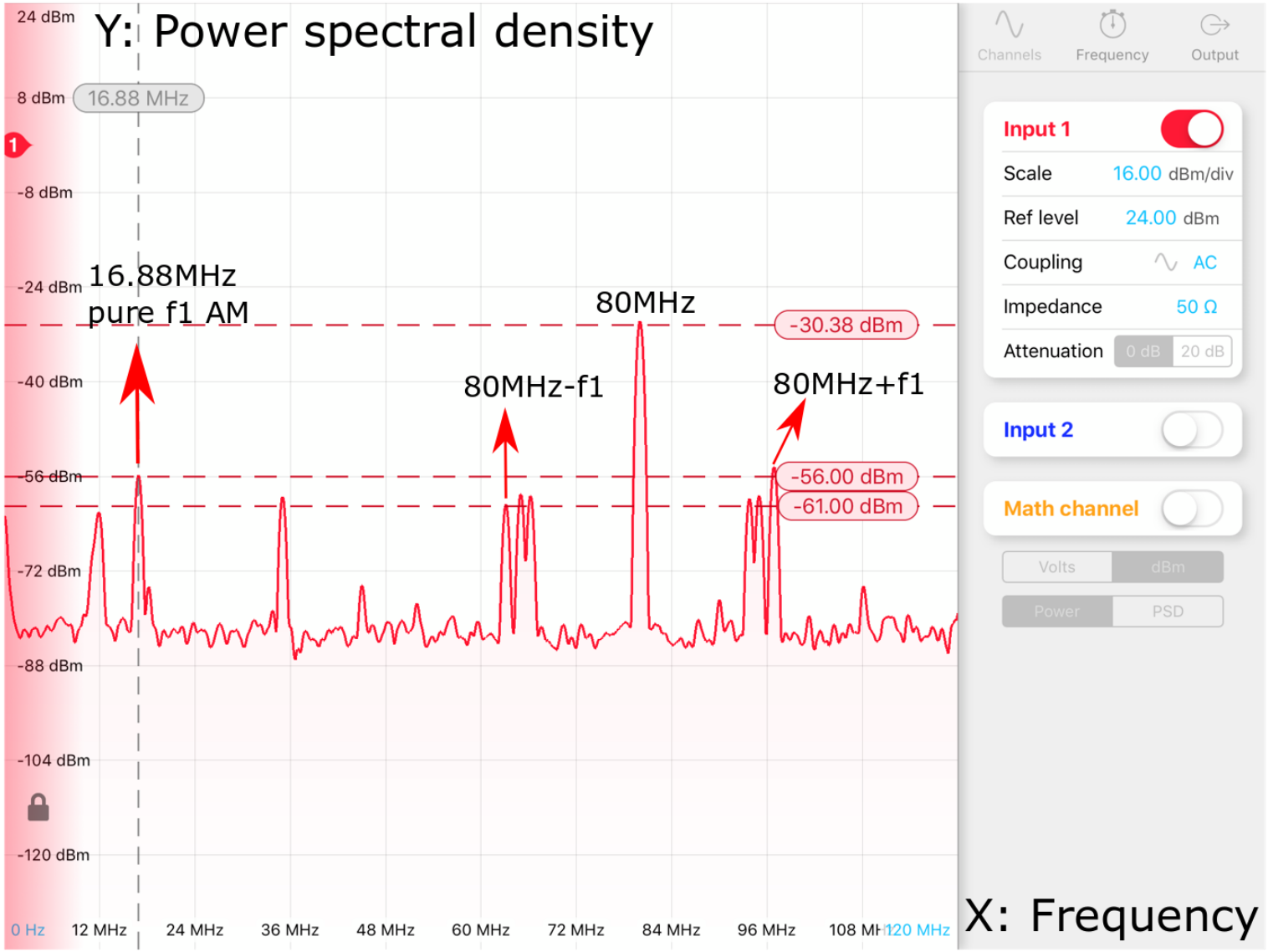

80degf1_Screenshot of spectrum analyzer

Measurement results

Mod.Index Ratio

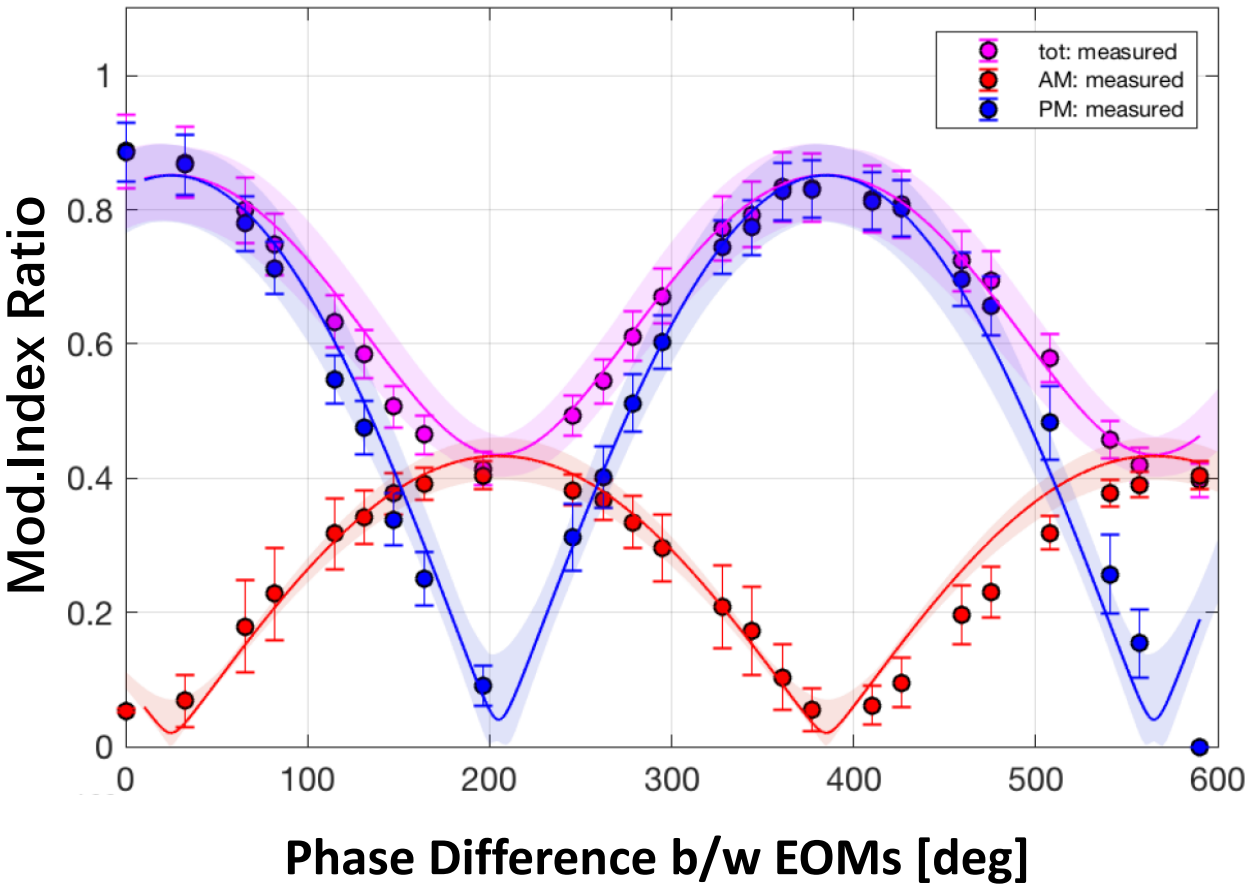

(f1)

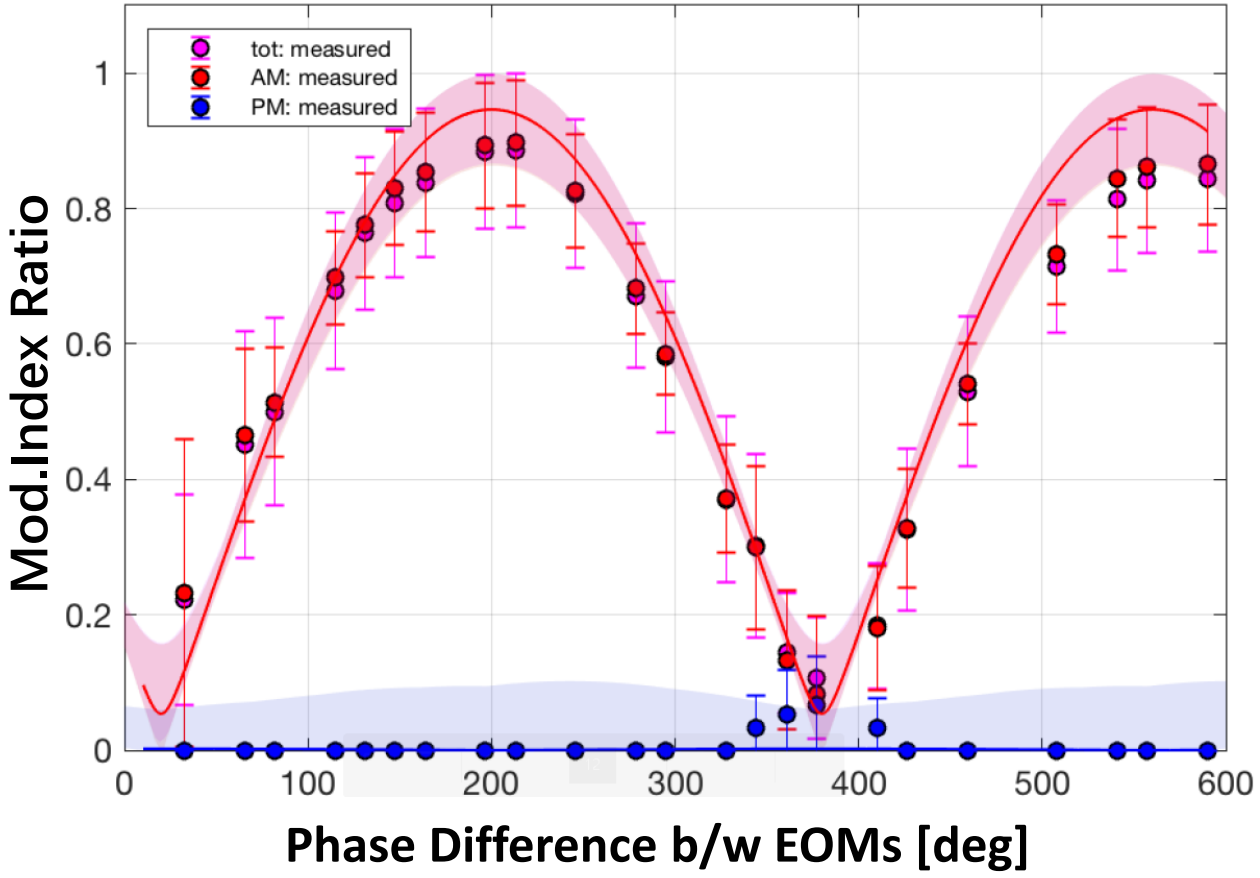

(f3)

Means the proof-of-principle experiments were successful and the measurements demonstrated the theory.

Measurement results

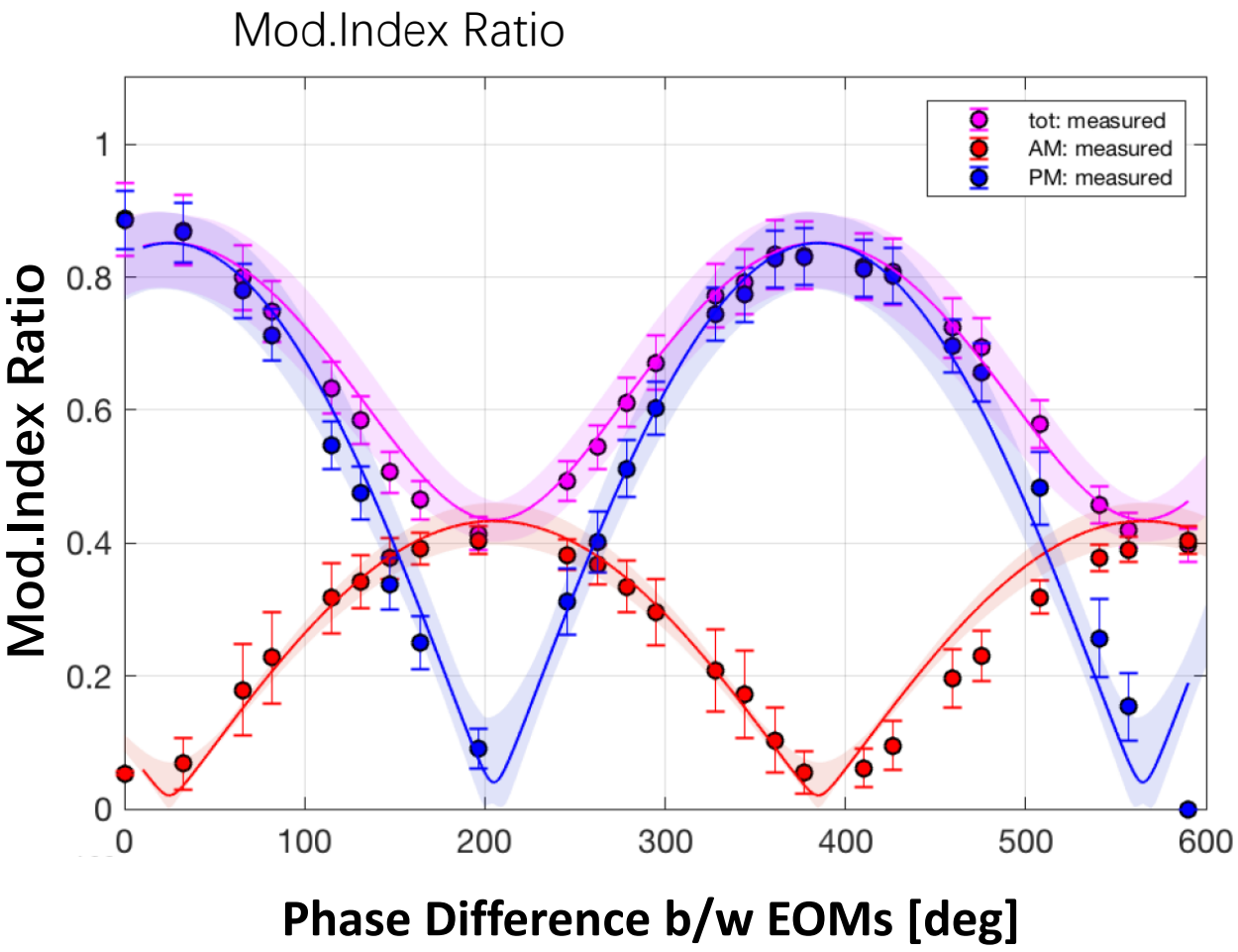

(f1)

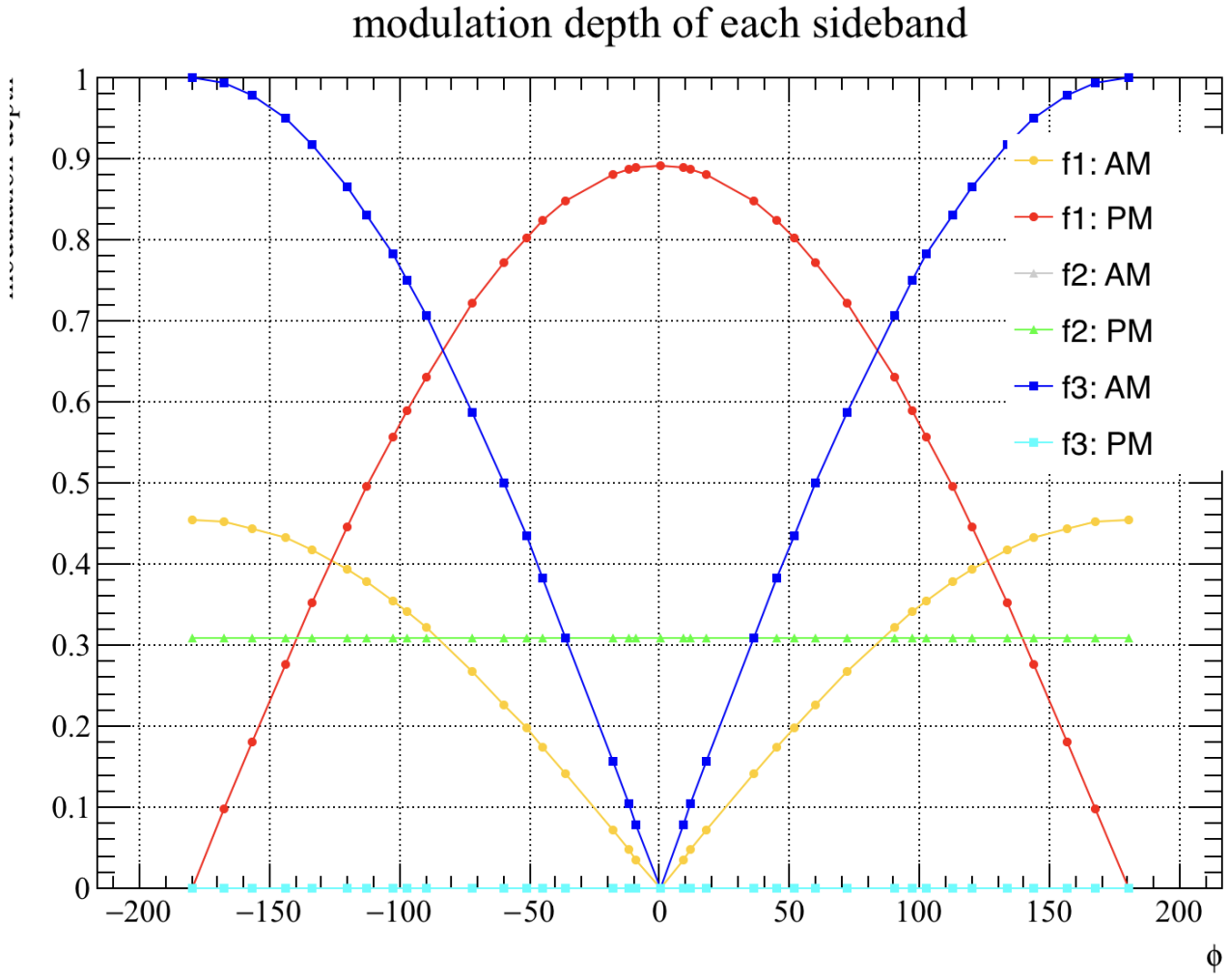

Means the proof-of-principle experiments were successful and the measurements demonstrated the theory.

Displacement noise

Displacement Noise Measurement

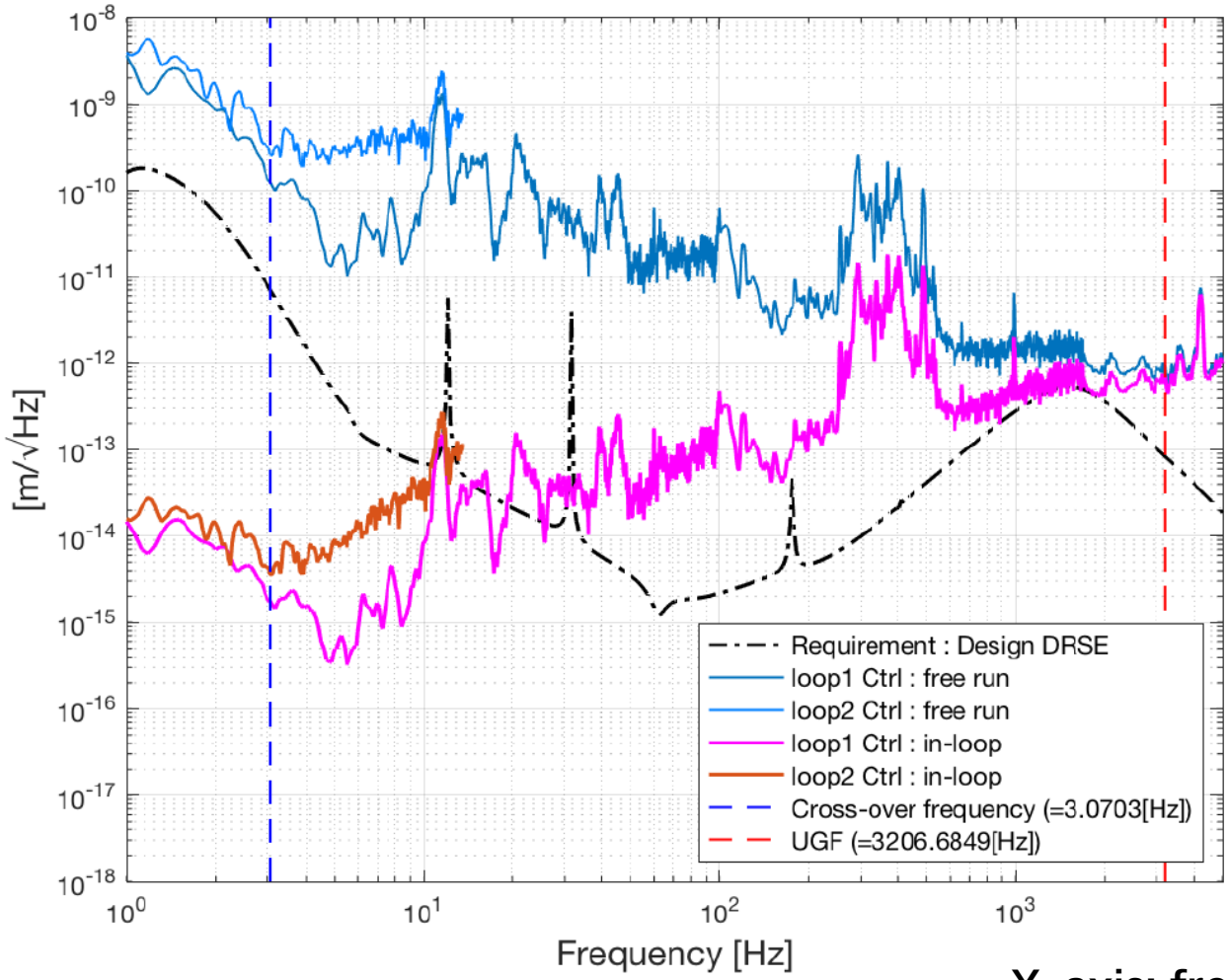

1st MZI

X-axis: frequency[Hz]
Y-axis: [m/rtHz]

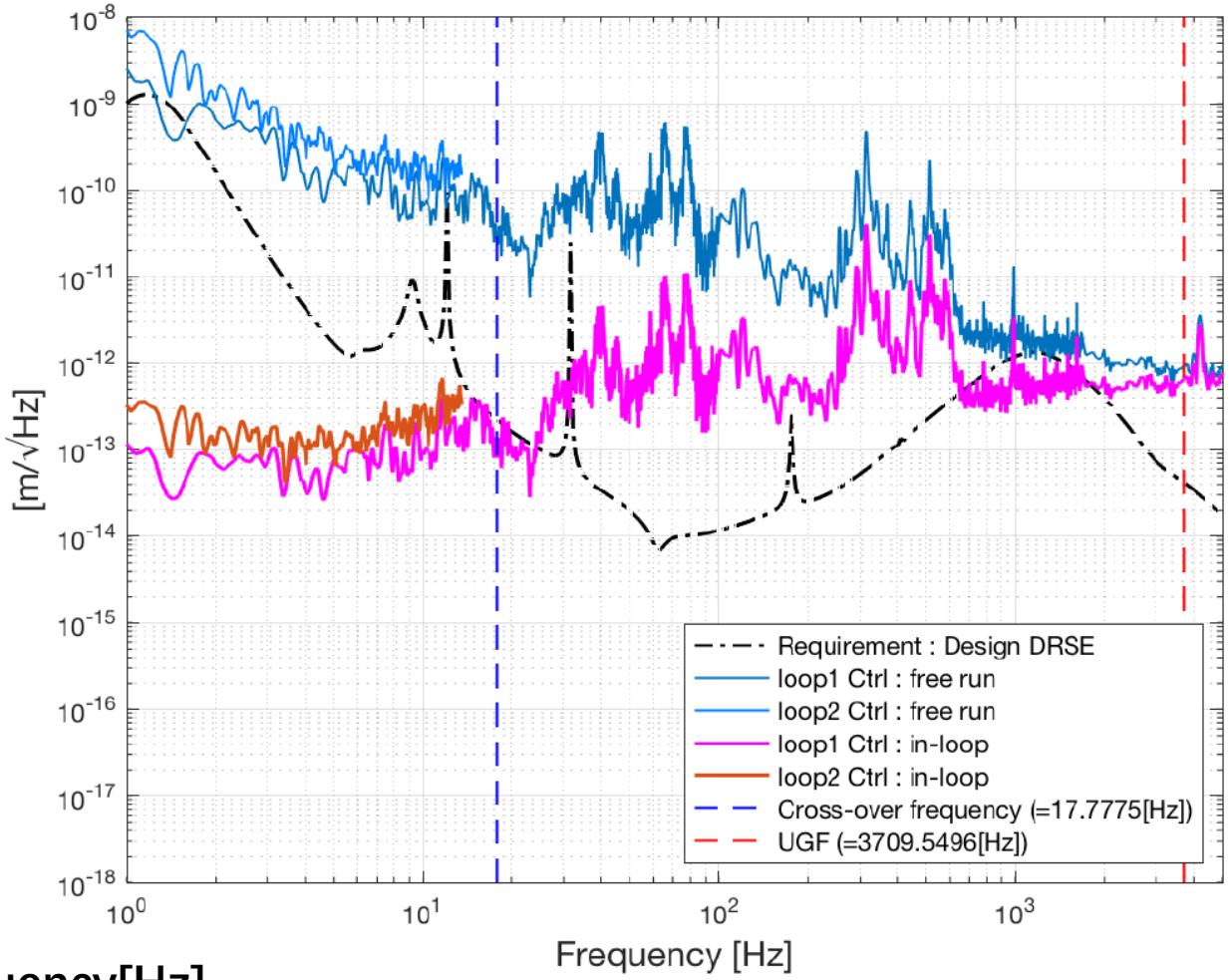

2nd MZI

It did not satisfy the requirement

Displacement Noise diagnose

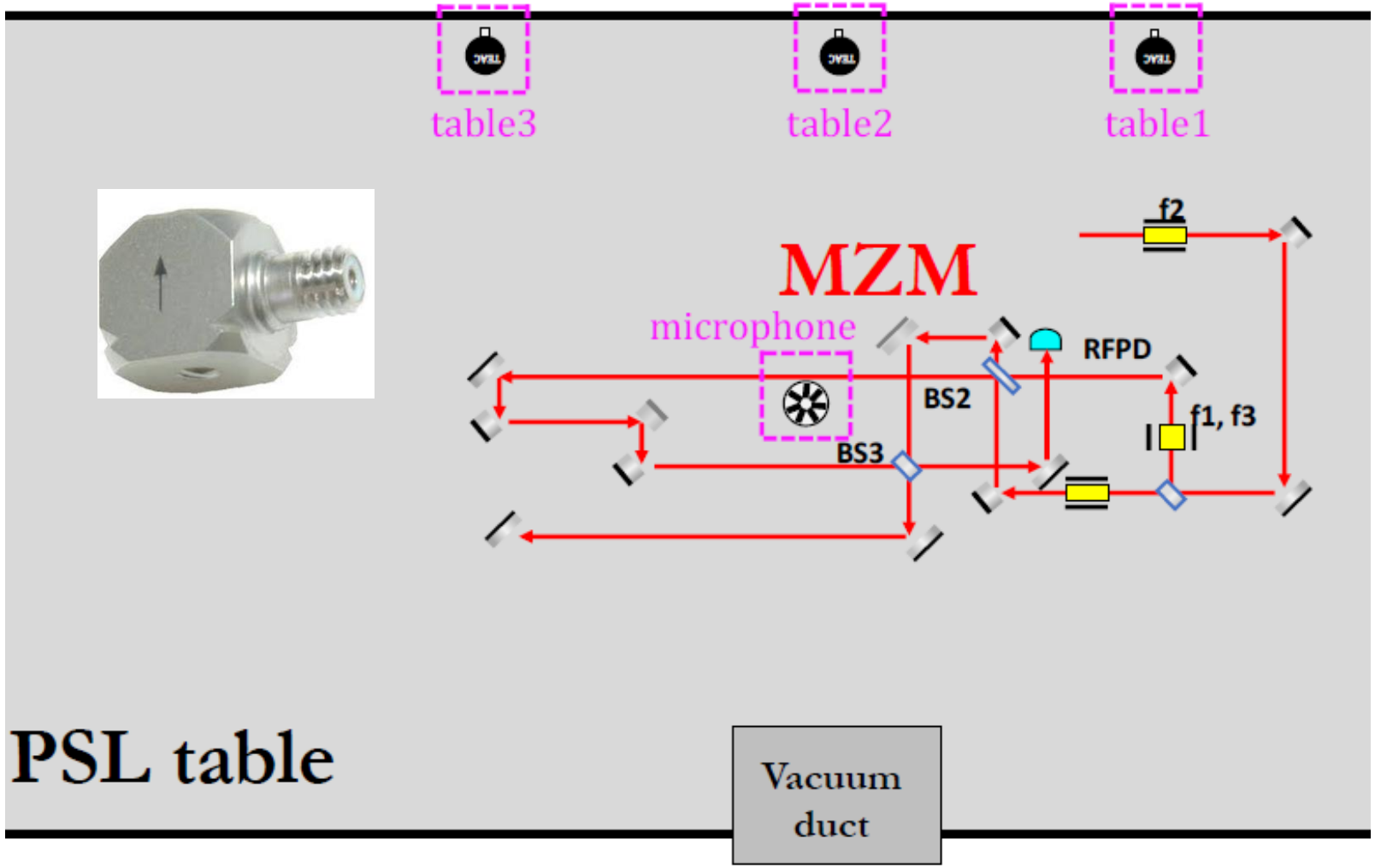

PEM sensors

- Accelerometer
- Microphone

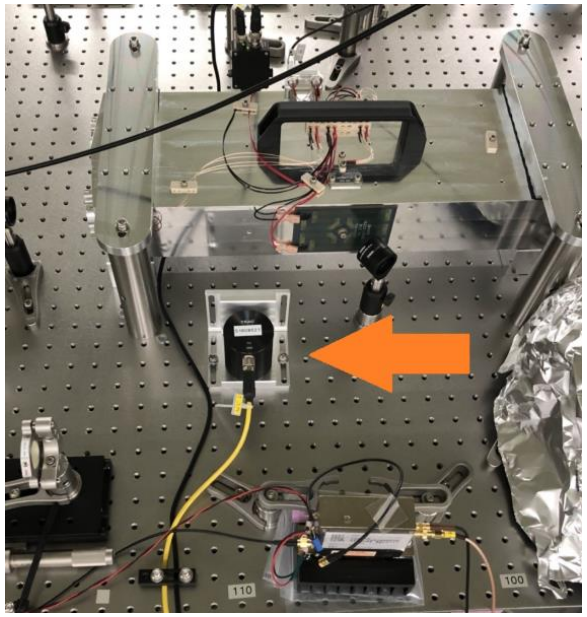

Displacement Noise diagnose

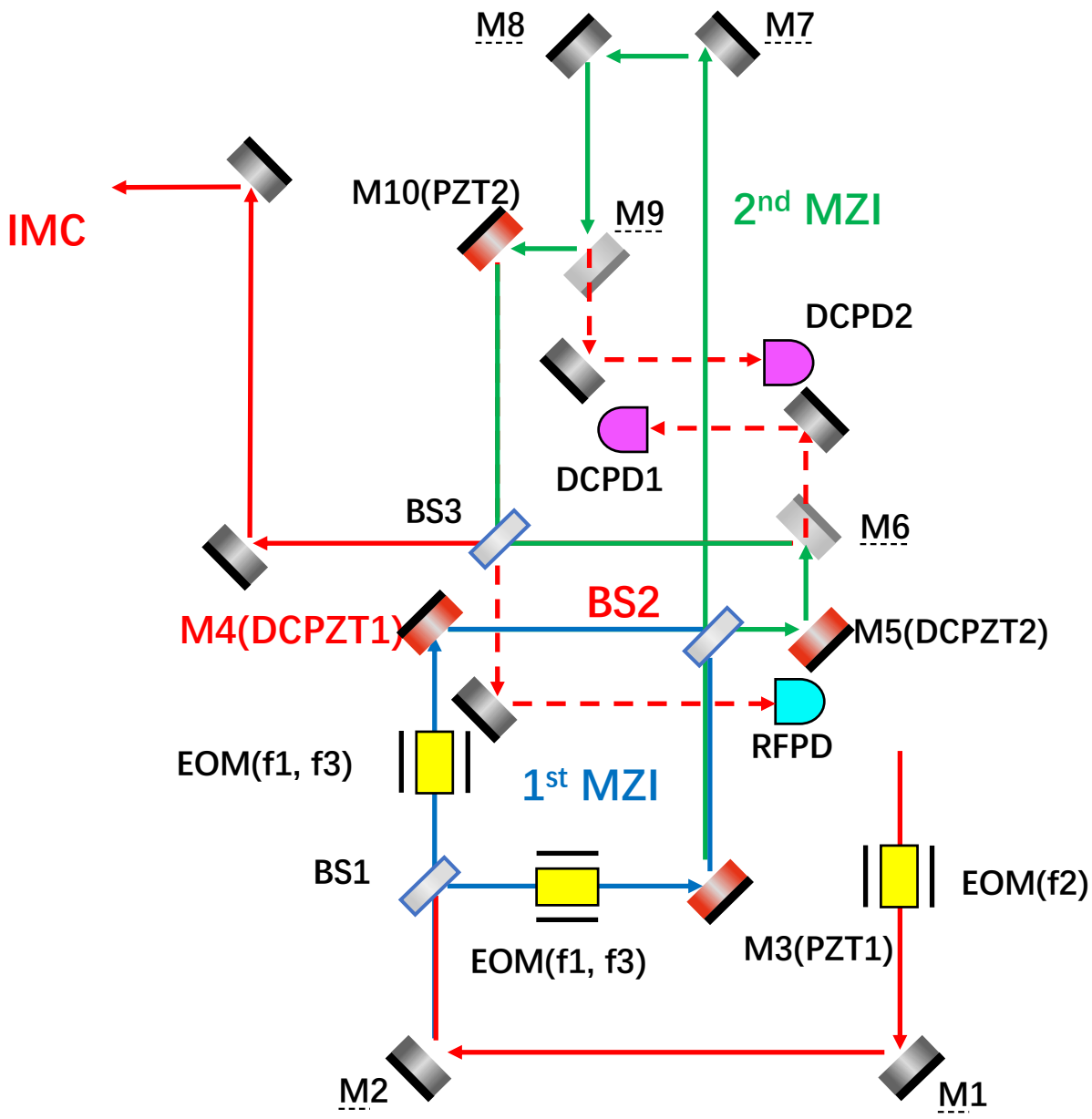

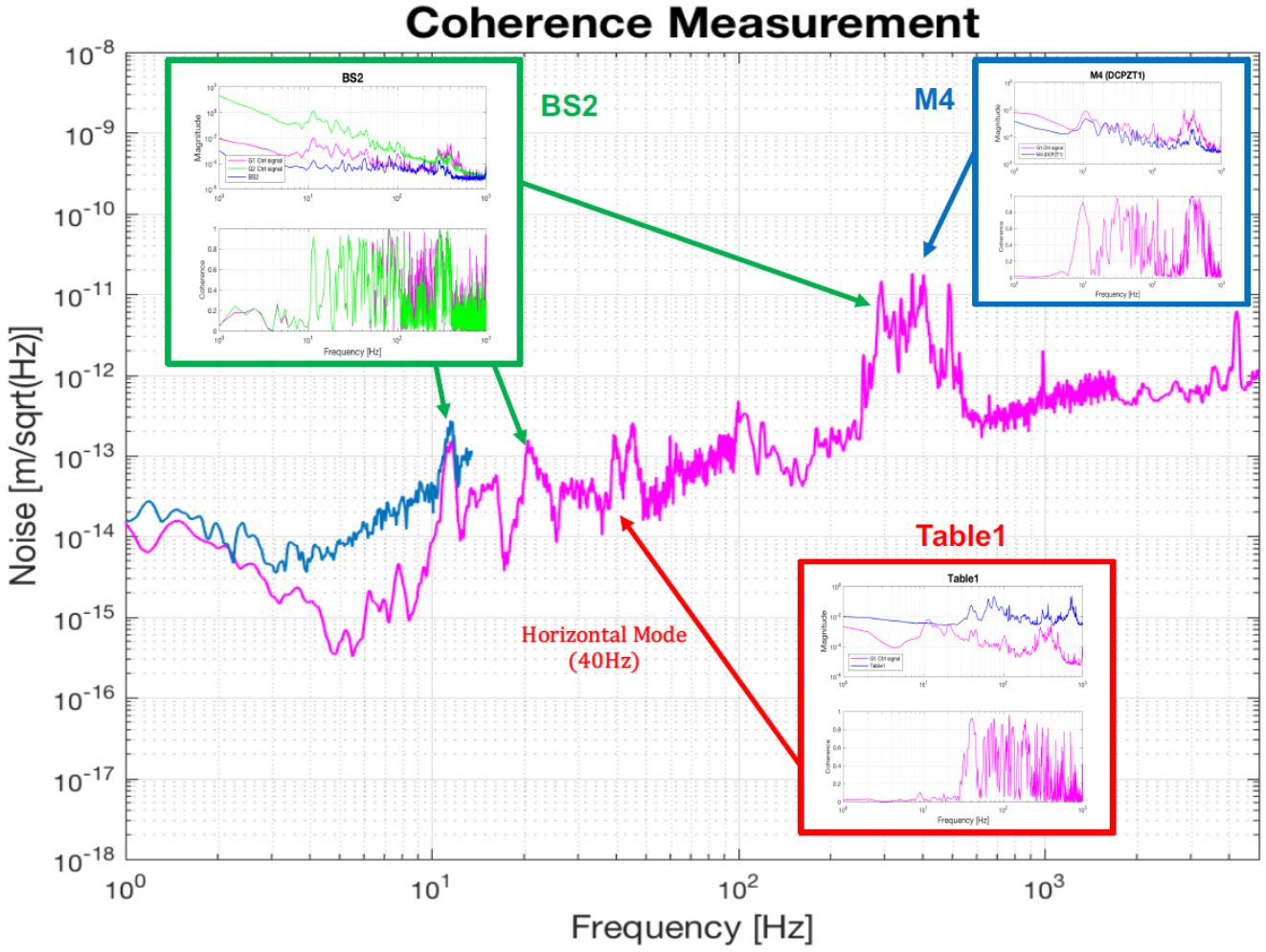

1st MZI displacement noise diagnose

Conclusion and Future plan

Conclusion:

- Demonstrated the basic function of MZM
- The current setup did not meet the noise requirement
- We could identify the noise sources

Future R&D ideas:

- Replacement of the pedestals and holders with more rigid ones
- Use of the monolithic optics
- Put the optical paths in vacuum
- Change of some parameters in the MZM system.

END