Beam Shutter Solenoid Driver Conceptual Design

Naoki Aritomi, Yuta michimura

Concept

- Use KAGRA +/- 24 V
- Use DAC 0V/5V or BIO to close/open shutter
- DAC control or BIO control can be switched

- Beam shutter design same as
  https://dcc.ligo.org/LIGO-D1800049
  (solenoid: 3EL-45-33-X4-X6-X9)

Beam Shutter Solenoid Driver

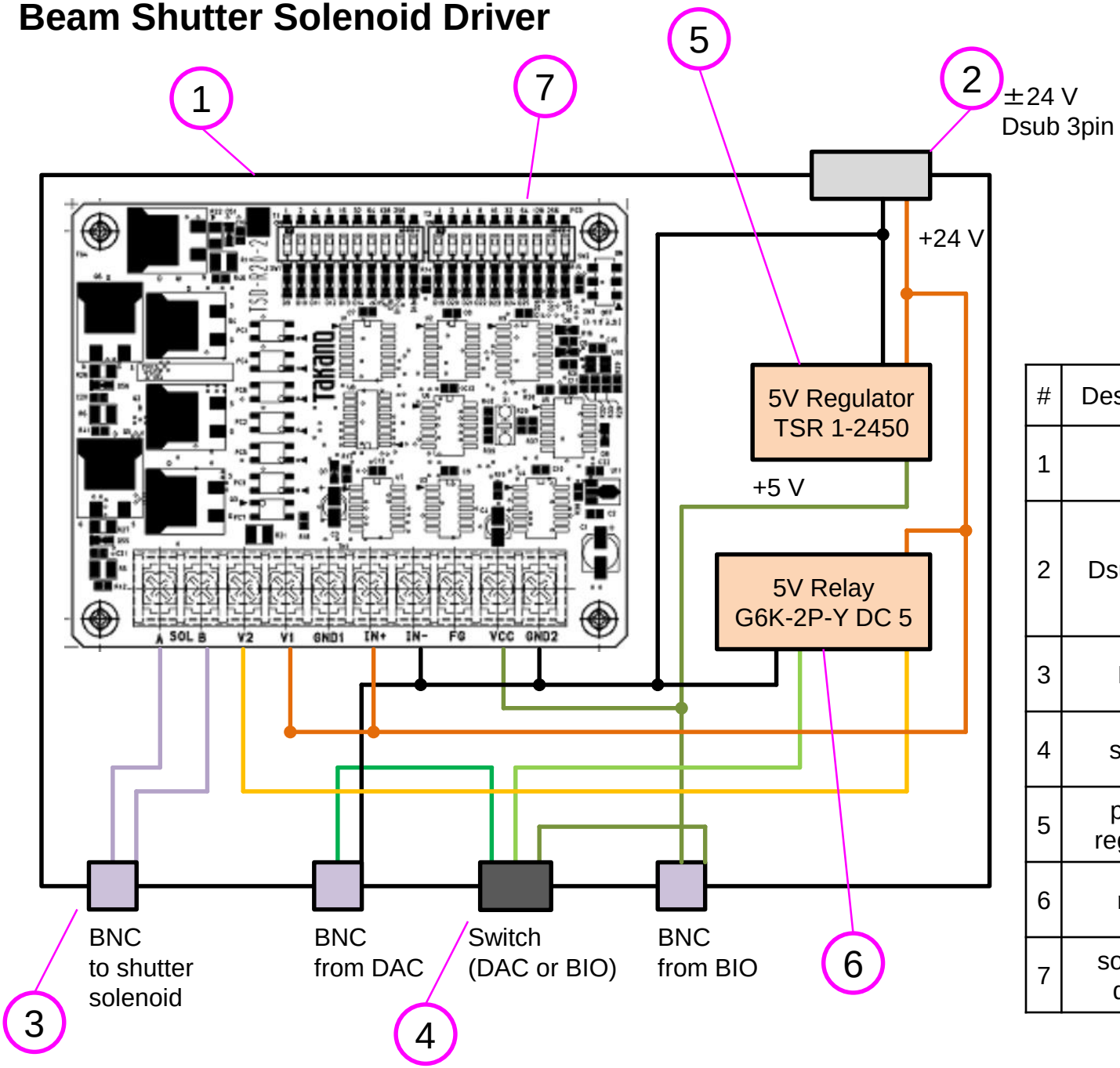

#	Description	Part number	qty
1	Box	Takachi box from Ando Lab	1
2	Dsub 3pin	Digikey 626-1098-ND and 3 pins 626-1148-ND	1
3	BNC	from Ando Lab	1
4	switch	from Ando Lab	1
5	power regulator	Digikey 1951-2747-ND	1
6	relay	Digikey Z132-ND	1
7	solenoid driver	Takano TSD-R20-2B	1