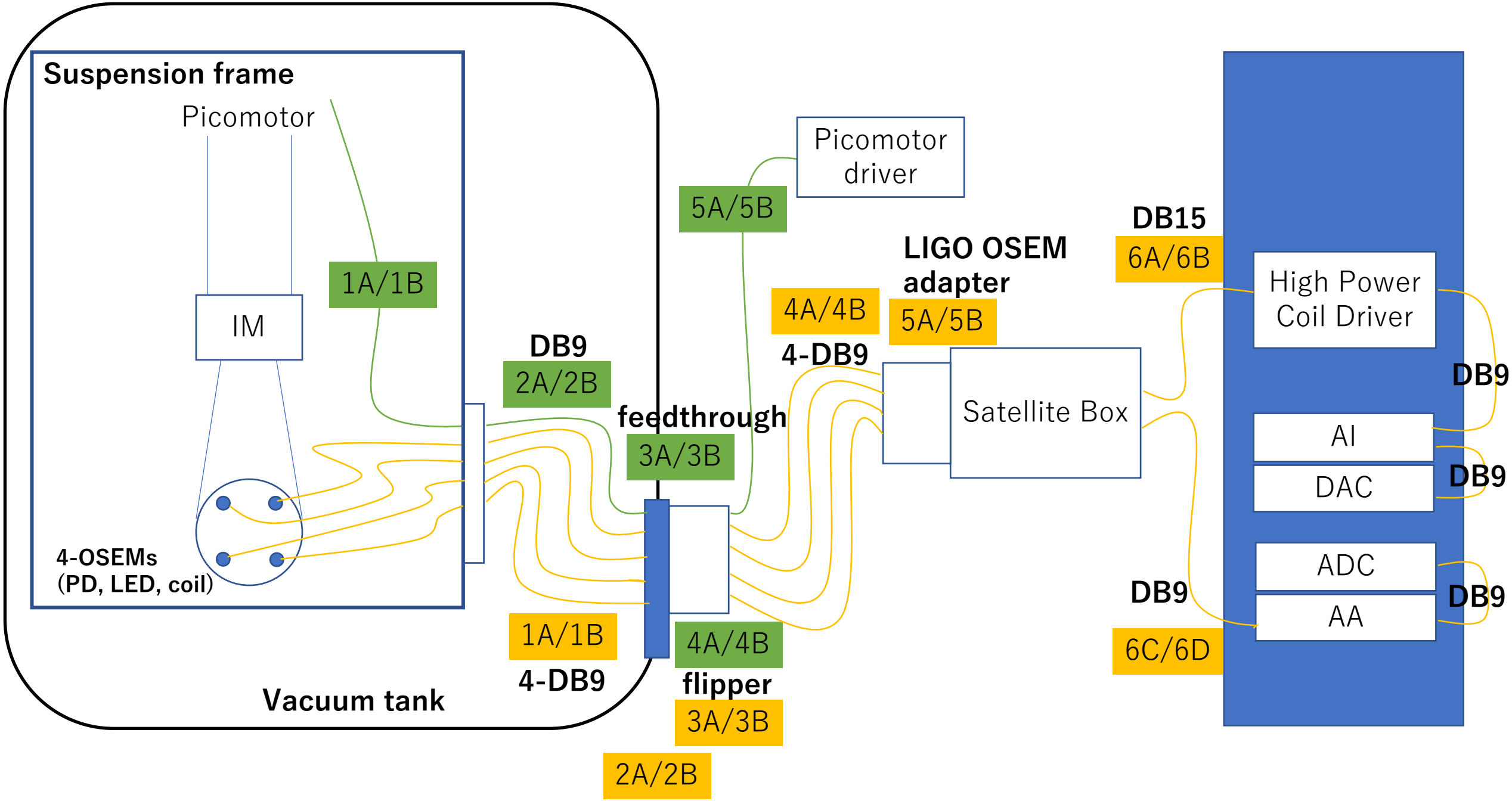
Suspension frame
Picomotor
IM
1A/1B
4-OSEMs
(PD, LED, coil)
Vacuum tank
DB9
2A/2B
feedthrough
3A/3B
1A/1B
4-DB9
4A/4B
flipper
3A/3B
2A/2B
5A/5B
Picomotor
driver
4A/4B
4-DB9
LIGO OSEM
adapter
5A/5B
Satellite Box
DB15
6A/6B
High Power
Coil Driver
DB9
AI
DAC
DB9
ADC
AA
DB9
DB9
6C/6D