PARTS LIST			
ITEM	QTY	PART NUMBER	DESCRIPTION
1	1	JGW-D1706098	
2	1	JGW-D1706099	

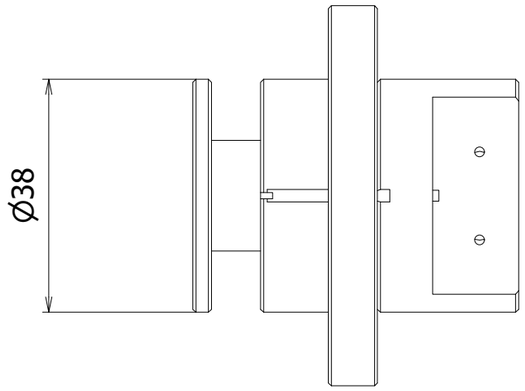

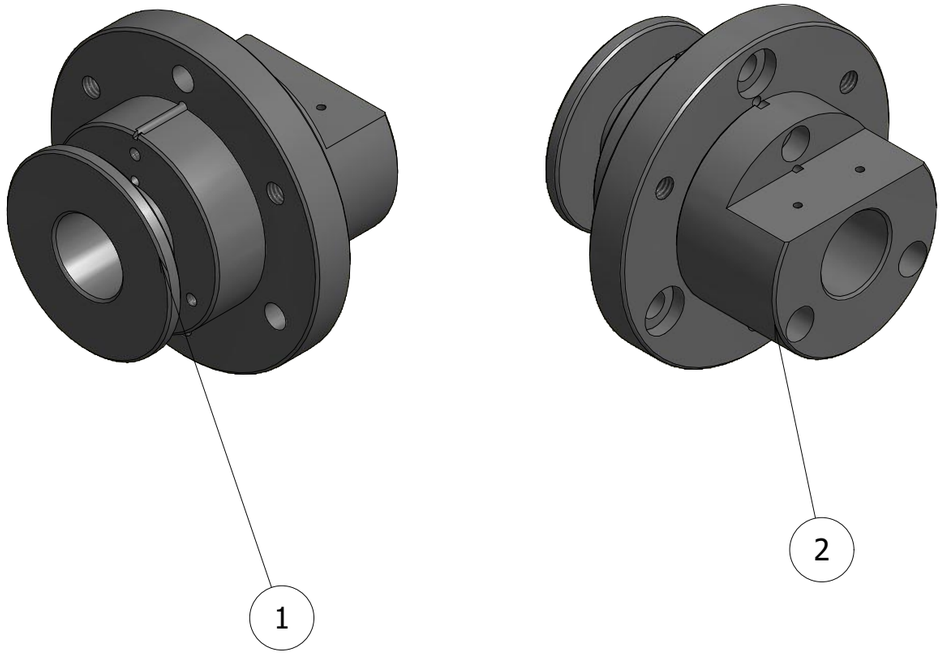

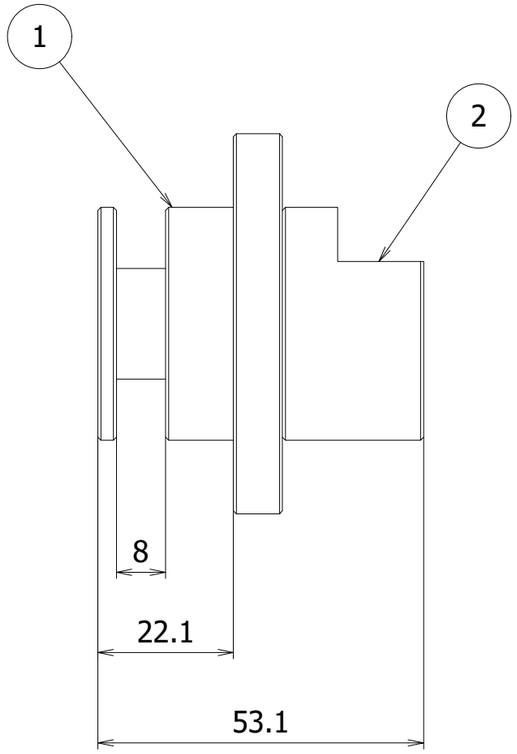

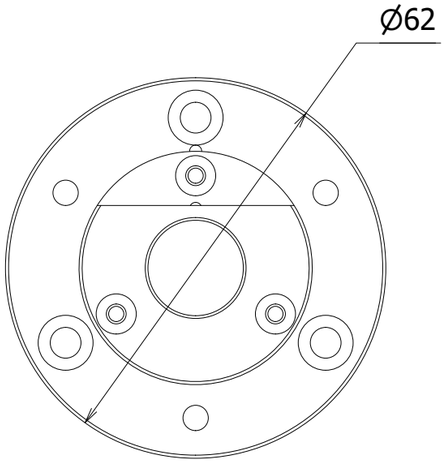

Unless otherwise specified:
All dimensions are in millimeters (mm).
Tolerances: JIS B 0419-mK
Machining finish: Ra25
Edge breaks: 0.2x45°

Material: Ketron CA30 PEEK			Project: KAGRA
FINISH			Source: New-Coil-Body.iam
			Title: BS RM Coil Body Assembly
	NAME	DATE	Drawing No.: JGW-D1706097 — Rev.: 1
Designed	Yoichi Aso		THIRD ANGLE PROJECTION — Scale: 1 : 1
Drawn	Yoichi Aso	2017/01/25	NAOJ — A3
Checked			1 / 1
Approved			