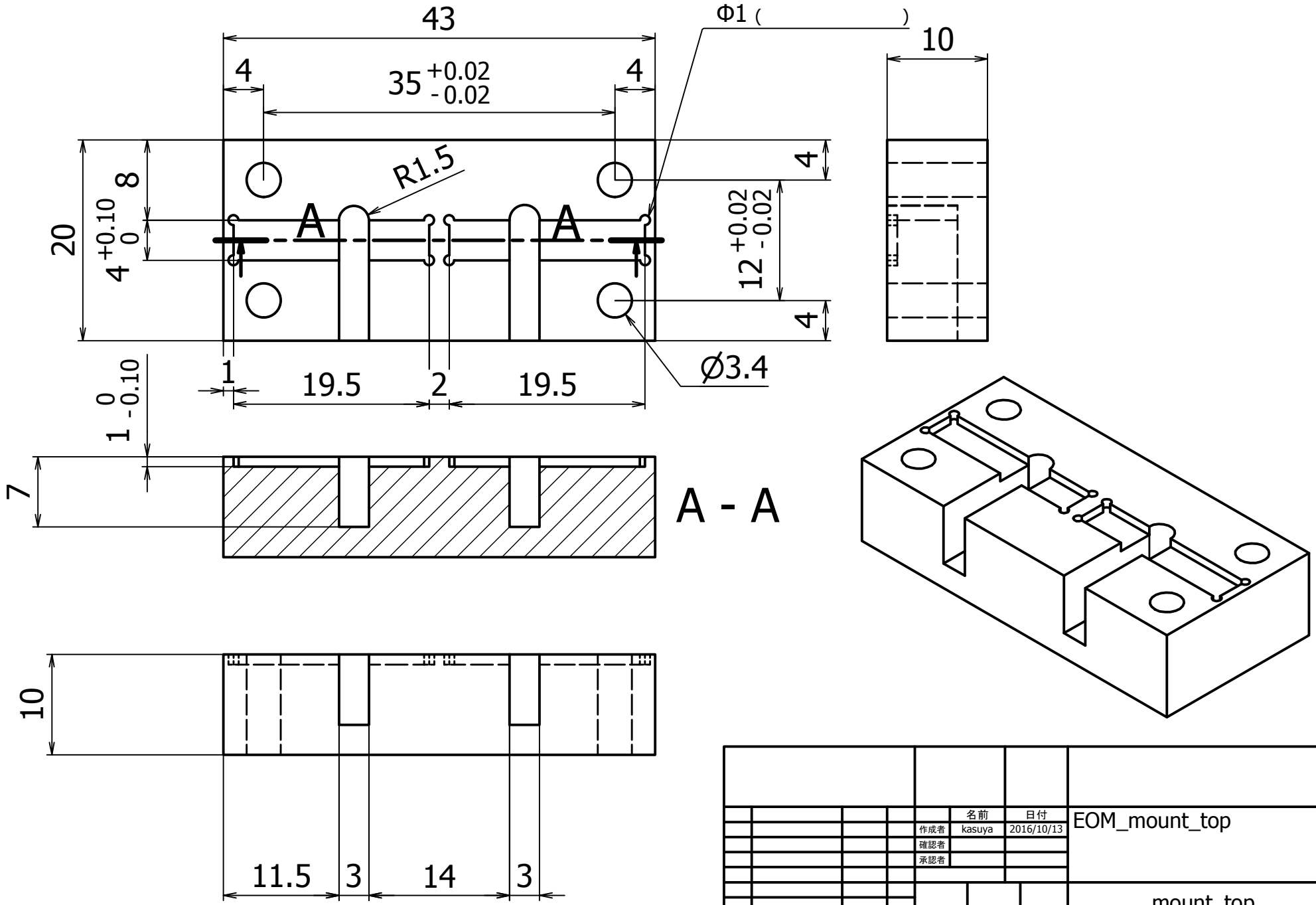


| | | | |
|---|---|---|---|
| | 名前 | 日付 | EOM_mount_top |
| 作成者 | kasuya | 2016/10/13 | |
| 確認者 | | | |
| 承認者 | | | |
| | | | mount_top |
| | | | 2 / 2 |
| | | | A4 |