Latest results of the performance tests of the type B suspension payload prototype for KAGRA

NAOJ, ICRR[A], ERI[B], Univ. Sannio[C], INFN Rome[D], NIKHEF[E]

Fábian Erasmo Peña Arellano, Ryutaro Takahashi, Hideharu Ishizaki, Naoko Ohishi, Kazuhiro Yamamoto[A], Takashi Uchiyama[A], Takanori Sekiguchi[A], Osamu Miyakawa[A], Masahiro Kamiizumi[A], Akiteru Takamori[B], Riccardo DeSalvo[C], Ettore Majorana[D], Eric Hennes[E], Jo van den Brand[E], Alessandro Bertolini[E], Kazuhiro Agatsuma[E], J. van Heijnigen[E], KAGRA collaboration.

Outline

- Goal of the presentation
- Introduction: including progress already reported elsewhere.
- Mechanical changes to the payload design:
  - Suspension wire clamps.
  - Suspension wire hook for intermediate mass (IM).
  - Wire breaker design.
  - Recoil mass (RM).
- Some quantitative results.
- Conclusion

Goal of the presentation

Report the recent changes made to the payload design in order to ease assembly and manufacture.

Introduction

Information that has been reported in the JPS Autumn Meeting at Saga in 2014

Introduction: SAS

Seismic attenuation system (SAS)

Type B

Pre-isolator (PI)

Top Filter (TF)

Inverted Pendulum (IP)

Filter chain

Standard Filter (SF)
Filter1~3 in Type-A
Filter1 in Type-B

Bottom Filter (BF)

Payload (PAY)

Intermediate Mass (IM)
Intermediate Recoil Mass (IRM)

Test Mass (TM)
Recoil Mass (RM)

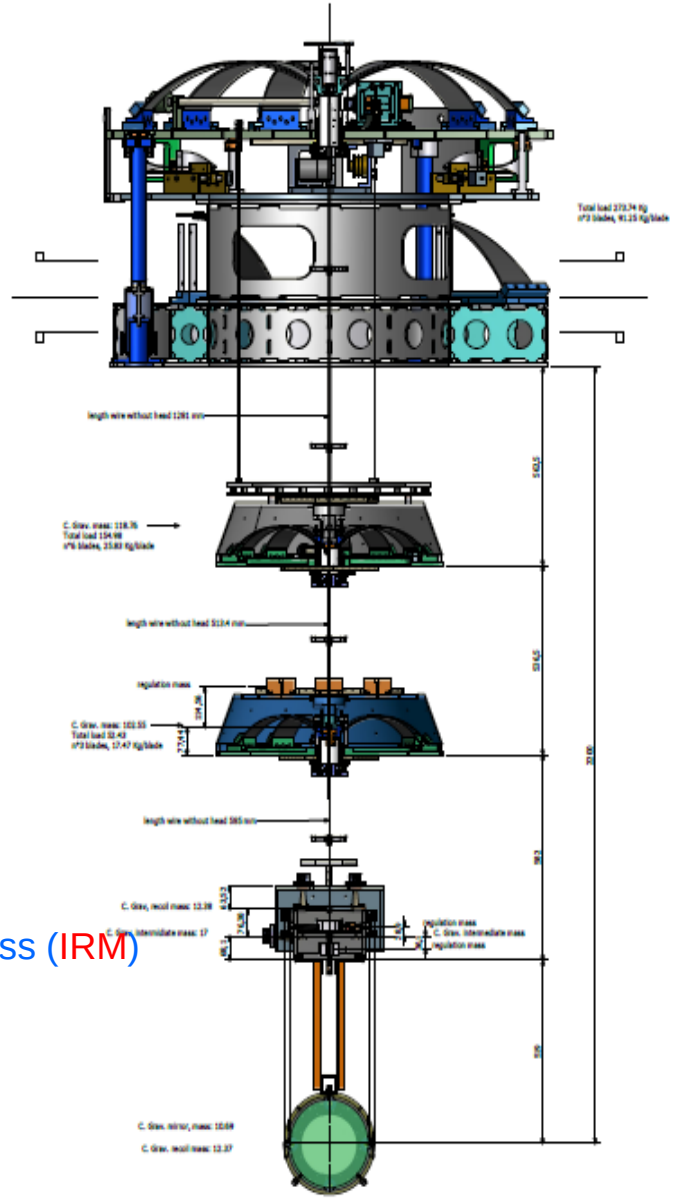

Introduction: payload and its prototype

- Test mass
- Recoil mass
- Intermediate mass (marionette)
- Intermediate recoil mass
- 10 OSEMs

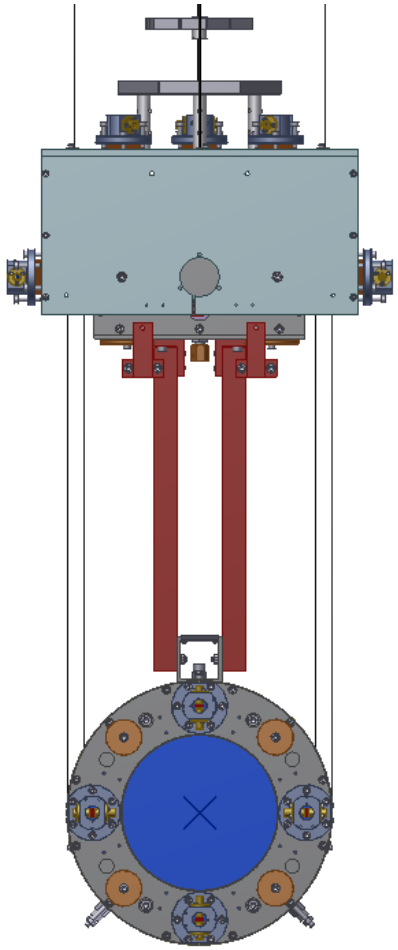

Test mass: 200 µm steel wire.

Recoil mass: 600 µm tungsten wire.

Introduction: payload prototype assembly

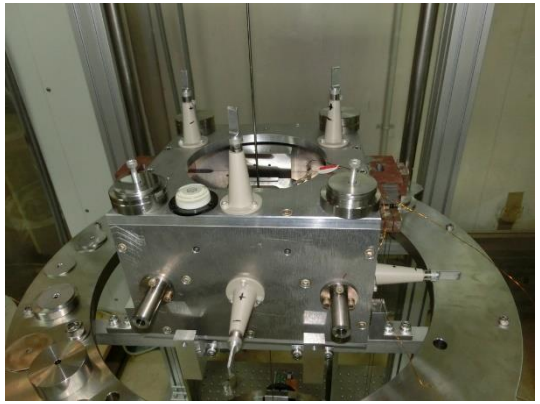

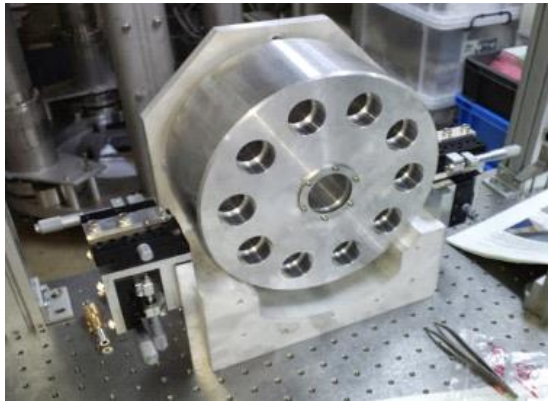

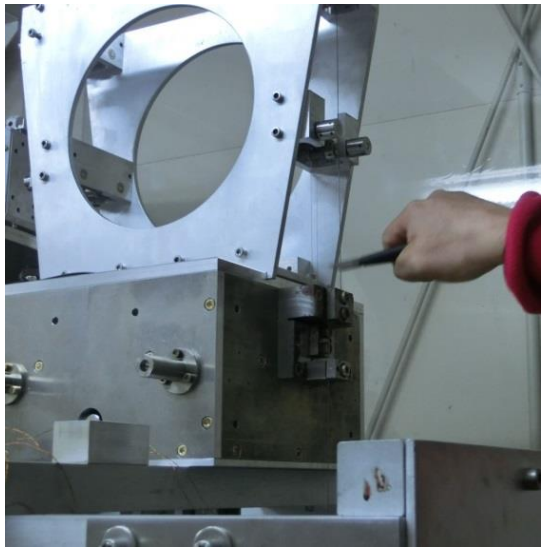

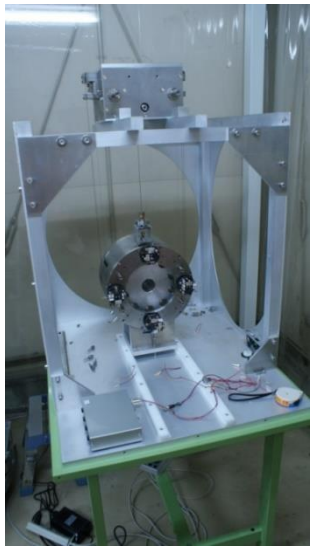

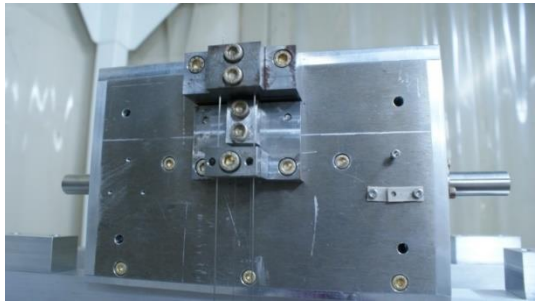

What an OSEM is (1)

- The position of the TM with respect the RM is measured with displacement sensors called OSEMs.
- The displacement measurement is achieved with a shadow sensor.
- Forces are applied using a coil magnet actuator.
- OSEM stands for Optical Sensor and ElectroMagnetic actuator.

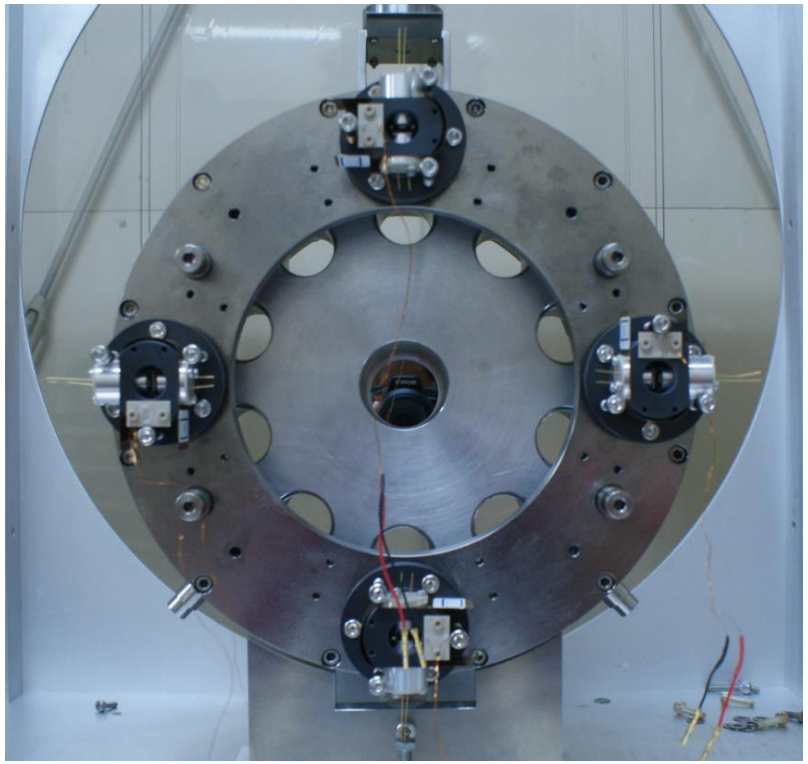

What an OSEM is (2)

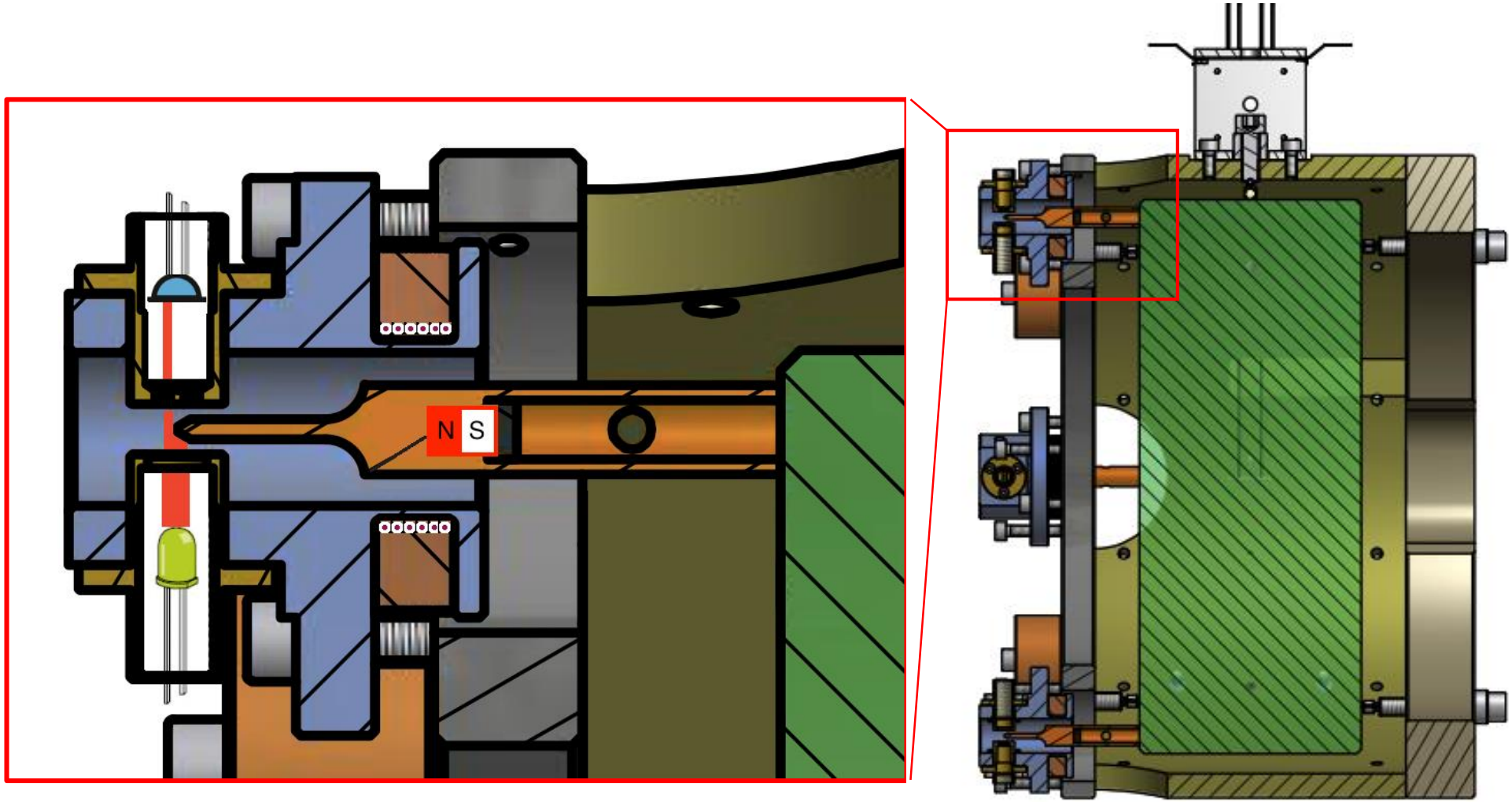

Introduction: mechanical design

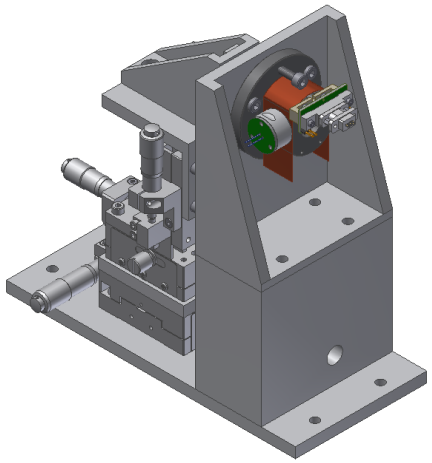

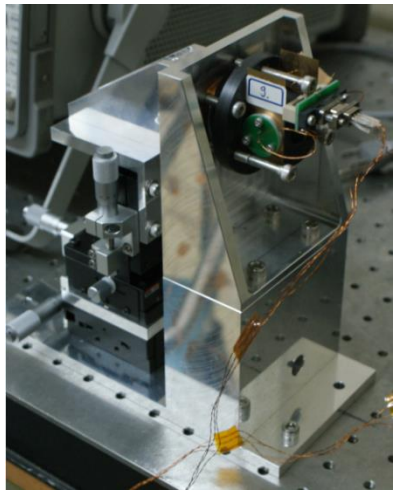

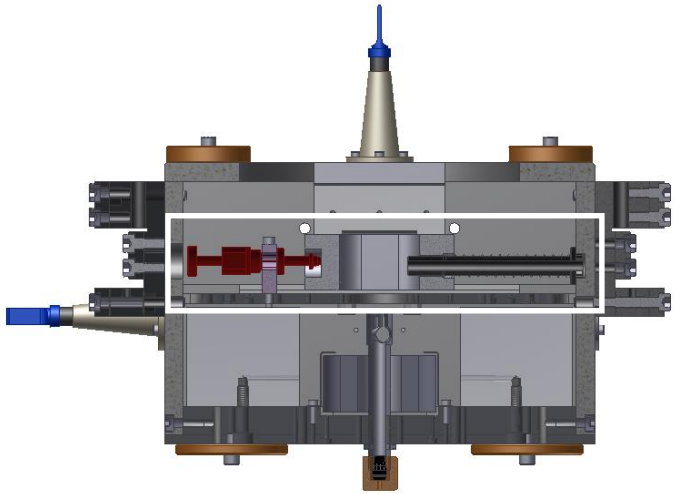

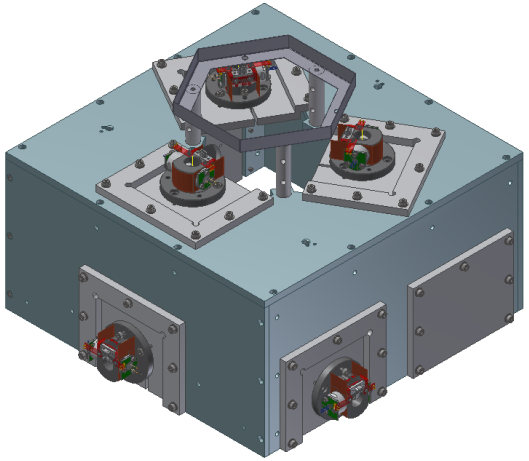

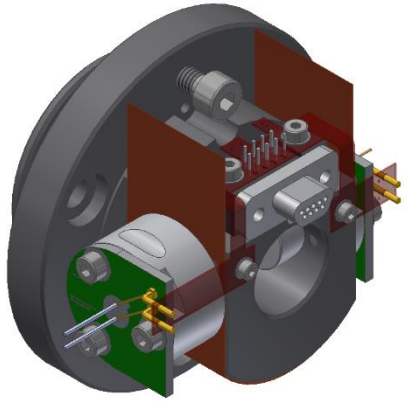

Introduction: quantitative results

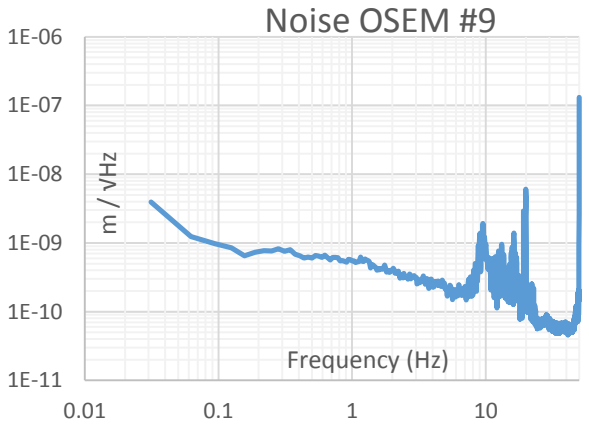

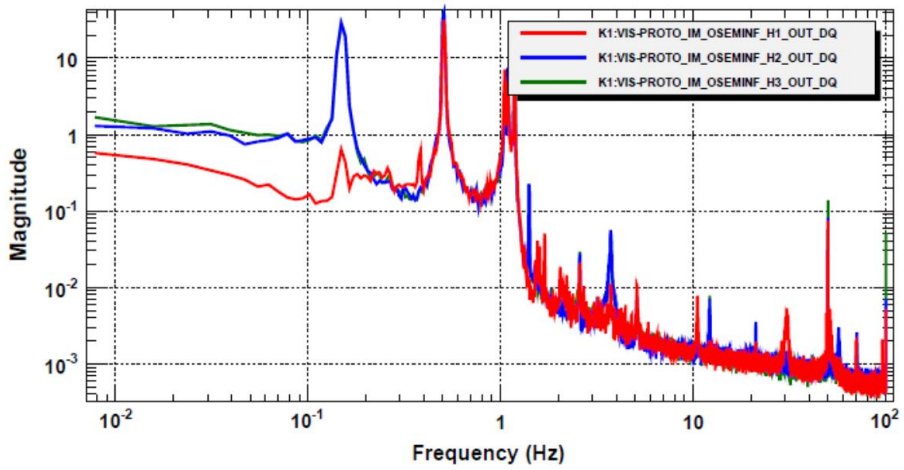

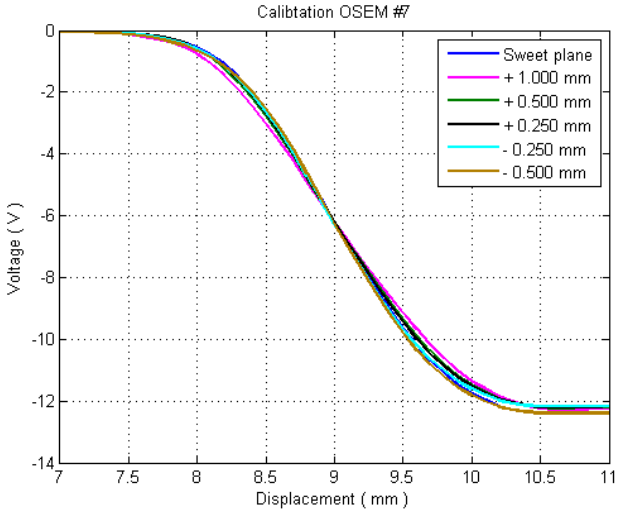

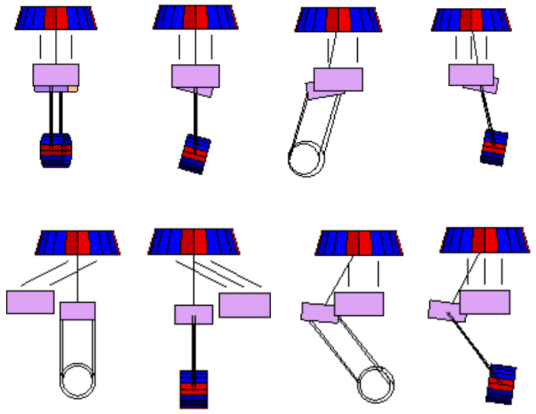

Mechanical changes to the payload design

Motivation: ease of manufacture, assembly and compatibility with optical lever.

Changes include BS and power recycler payloads

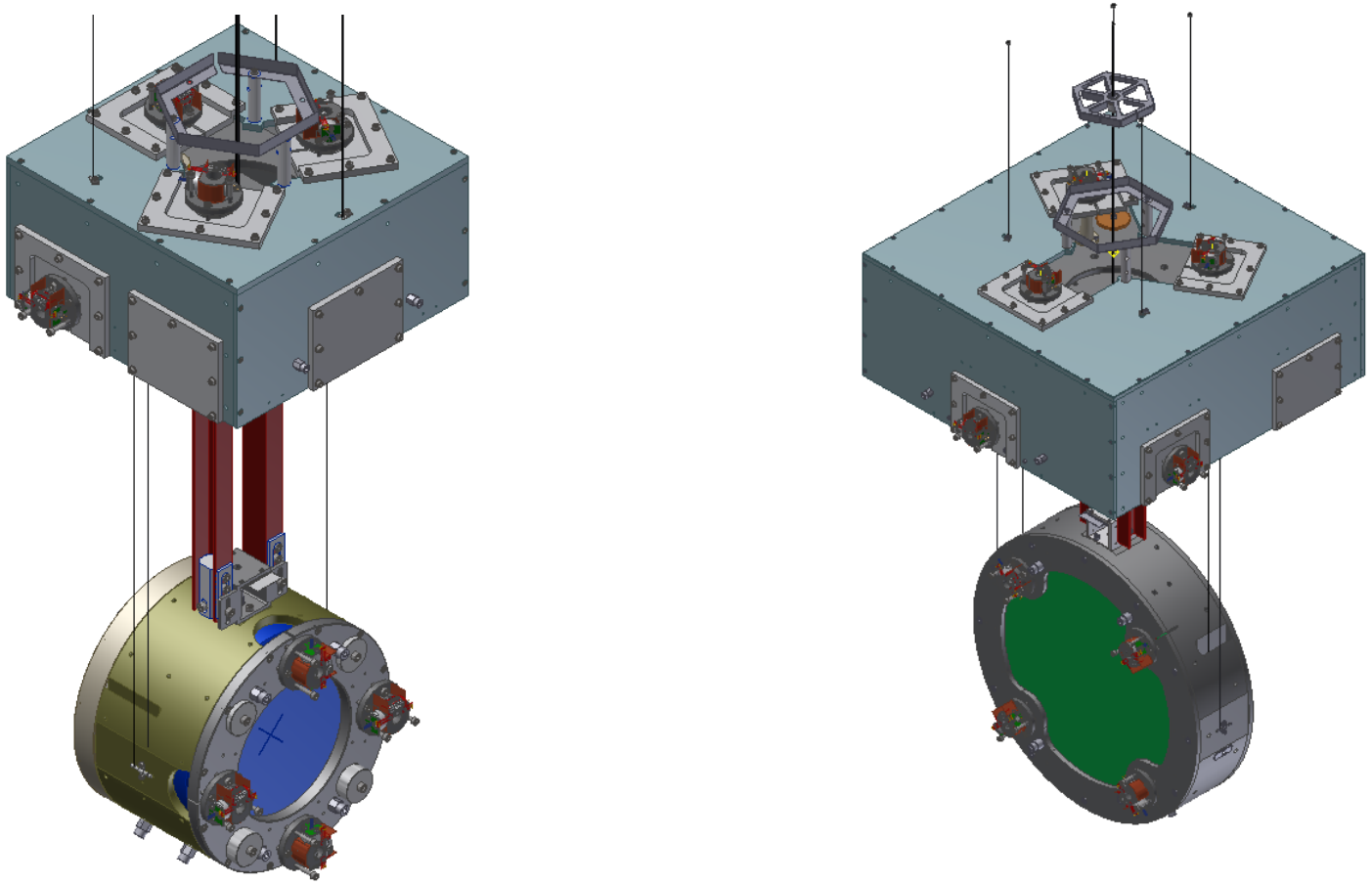

Review of the design of the suspension wires clamps (1)

Clamps for holding the weight of the lower stage with the wires. It requires plastic deformation of the wires.

Clamps for fixing the wires in the right position. It requires an elastic deformation of the wires only.

Original version

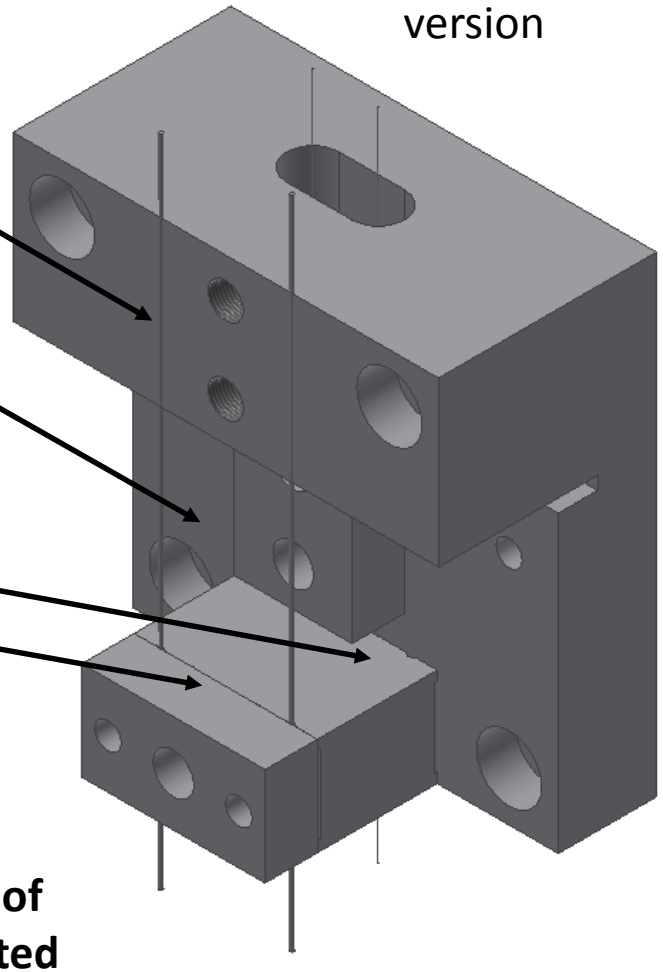

Latest version

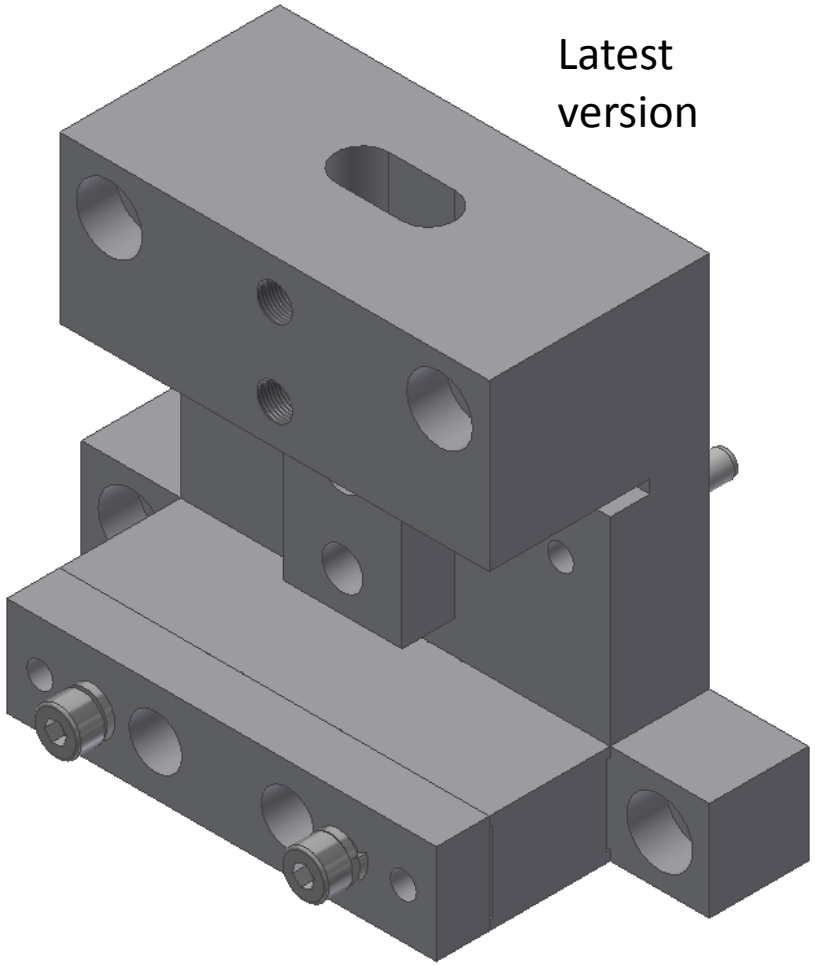

In the lower clamps the compression of the wires for the TM cannot be adjusted separately from the wires of the RM.

In the latest version different amounts of compression for different wire pairs is possible.

Review of the design of the suspension wires clamps (2)

The new design may be in principle a good idea, it still requires a lot of experimentation.

According to a **preliminary** calculation, to achieve an **elastic deformation** of the piano wire a compression of no more than **6 μm** is required.

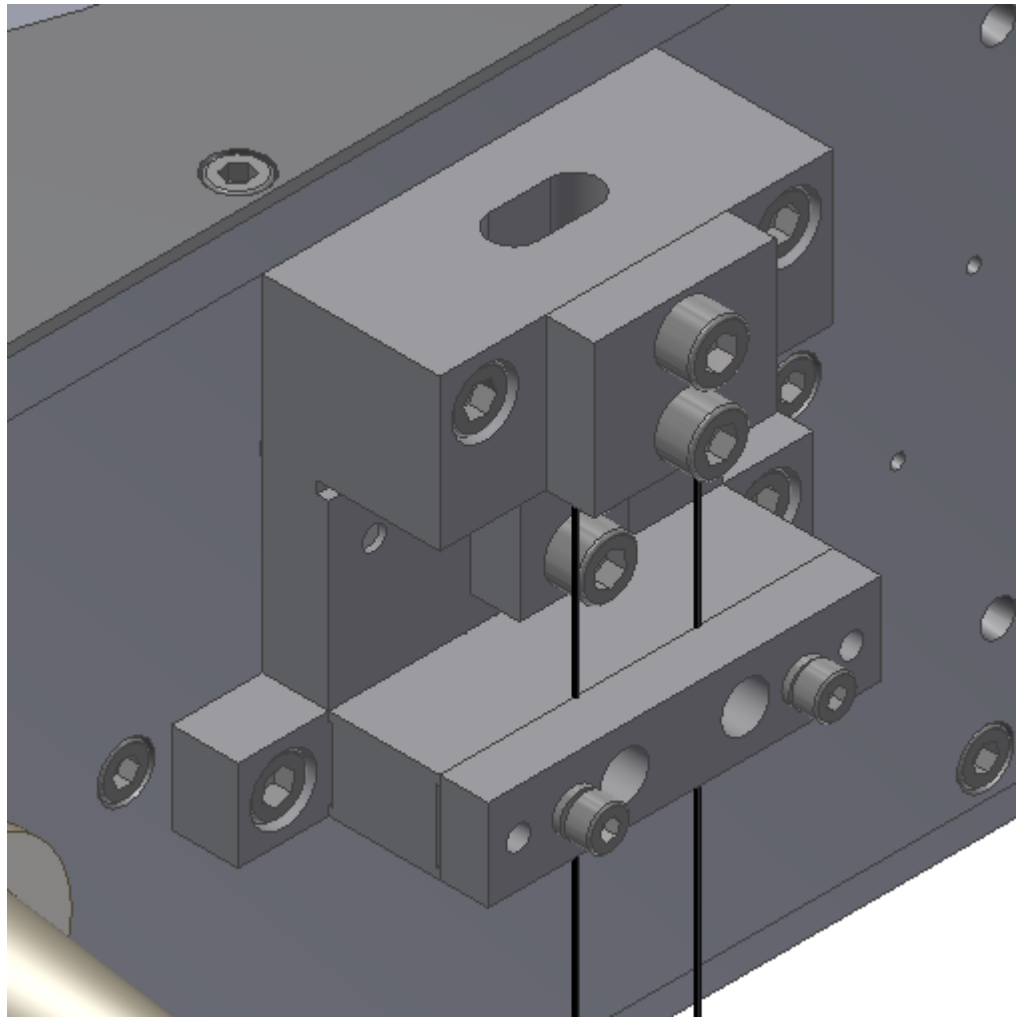

Suspension wire hook (1)

- The IM loses balance upon recoupling with the BF with the wire. **This is a problem when putting the IRM**.
- There is a gap of ±50 µm between the wire head and the cavity of the piece that hooks to it.
- Upon reassembly the head is always in a slightly different position rendering the center of mass in a different place, producing thus a tilt.
- We should reduce the gap. As a temporary solution we put kapton tape around the head.

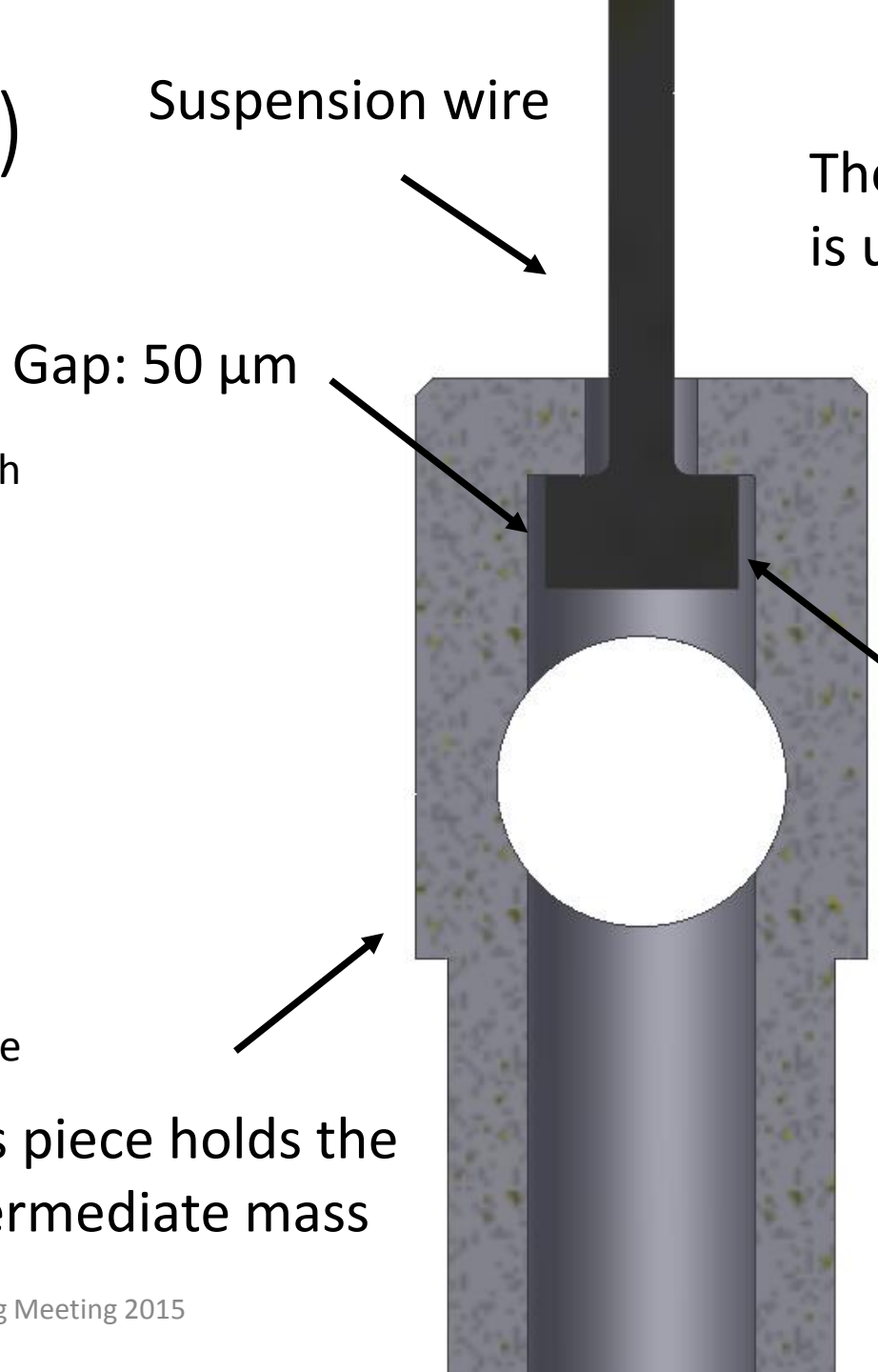

Suspension wire hook (2)

- In the new design the gap has been reduced to a nominal value of ±25 µm.
- This piece will likely be made at the ATC at the NAOJ referring to the actual wire head.

$\text{Ø}7.05^{+0}_{-0.01}$

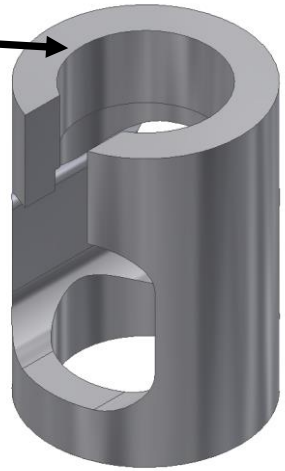

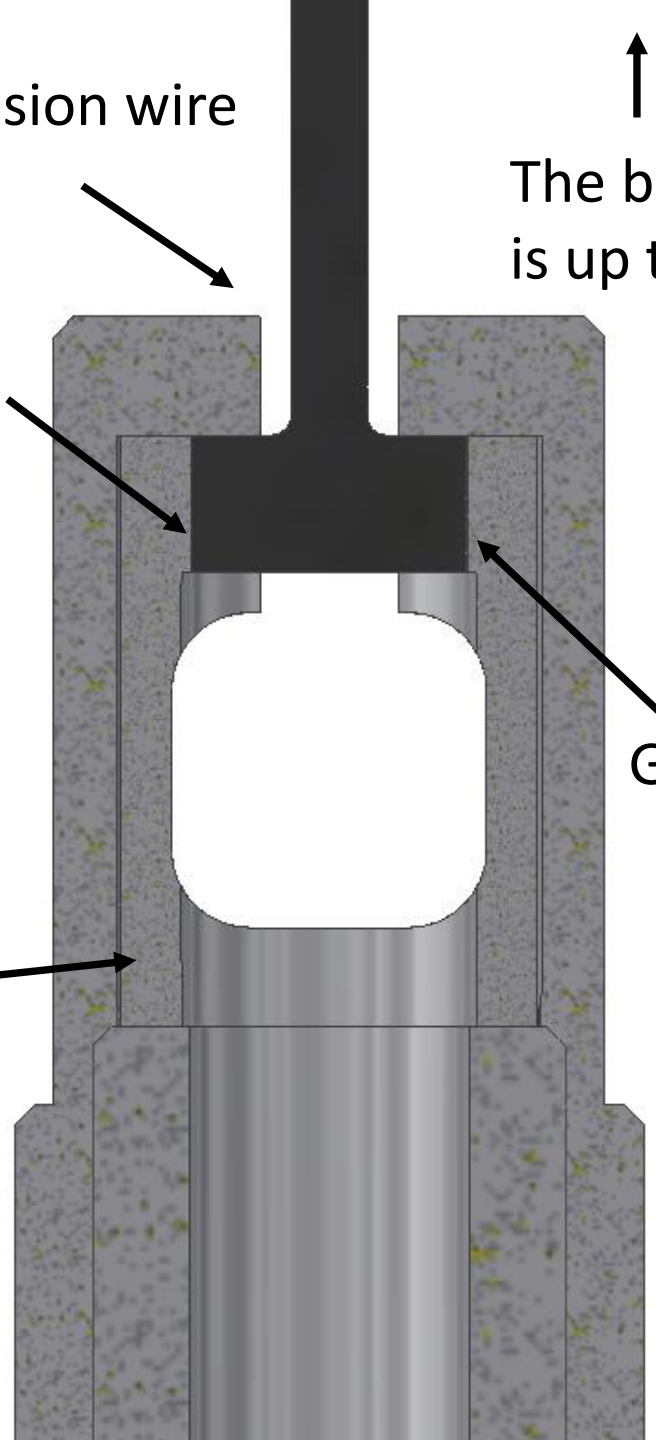

New wire breakers: from cylinders to prisms

Motivation

- Reduction of the **thermal noise** in the beam splitter suspension.
- Straight grooves a more **robust receptacle** for the wires in case of tilts.
- According to LIGO's experience it is possible to achieve the expected **violin modes** by adjusting the positions of a secondary lower pair of prisms. (Adjustment which likely won't happen for iKAGRA due to time constraints.)

Previous wire breakers

Upon a small roll of the RM the wires tend to go off the hosting grooves of the wire breakers, making the system unstable.

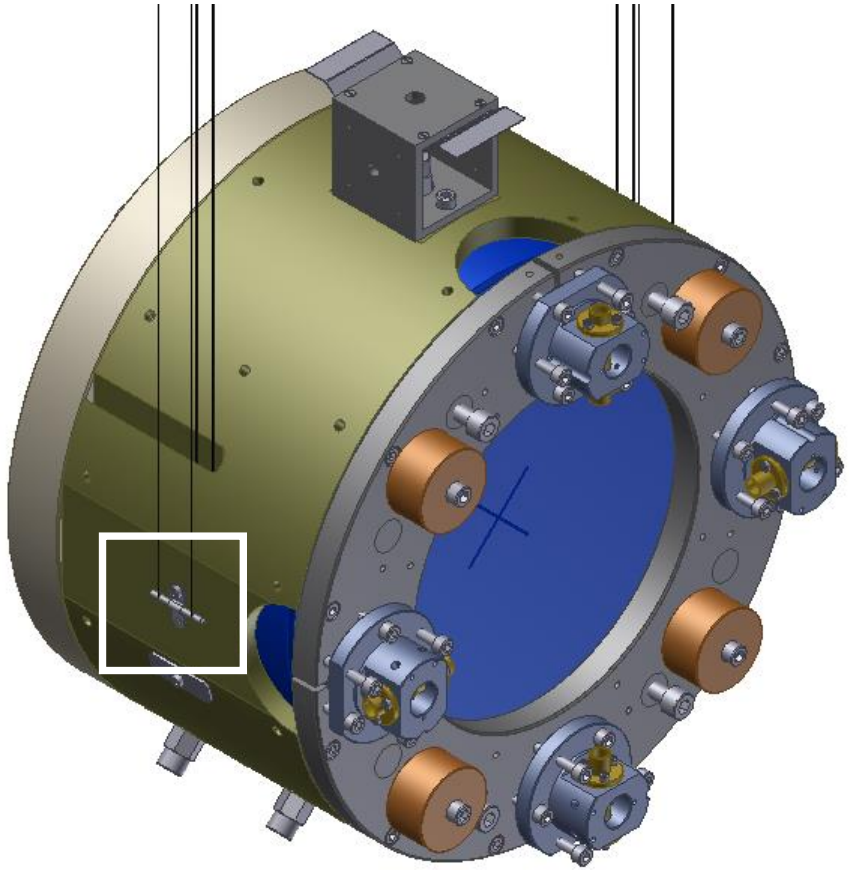

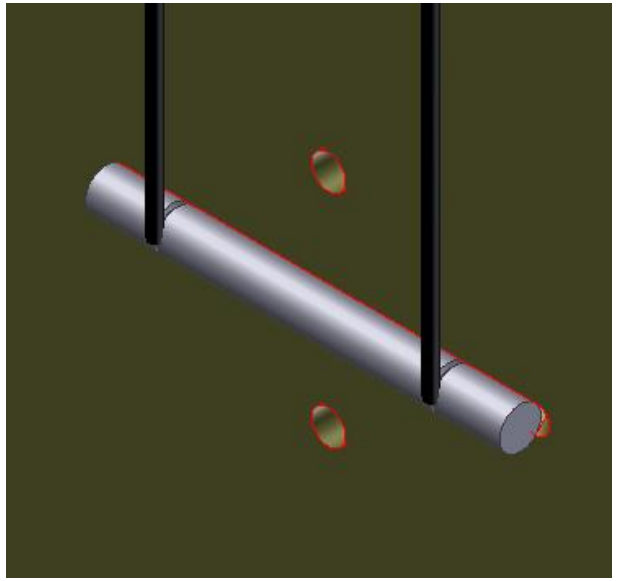

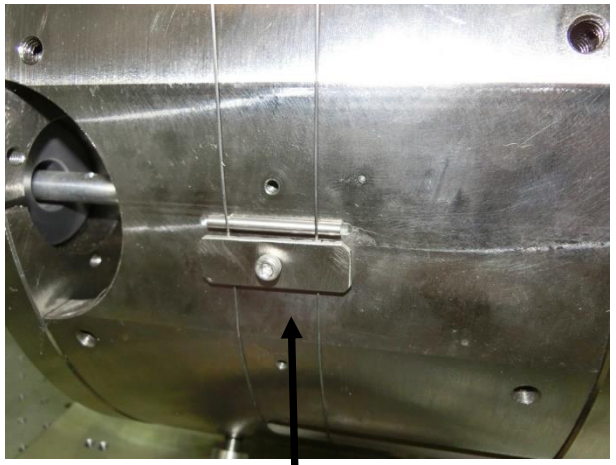

We put a clamp under the wire breaker

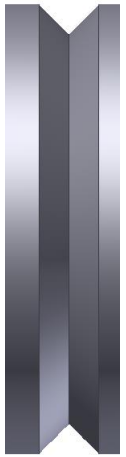

Depth of only 200 µm for a wire of 600 µm

Wire breakers

Test mass

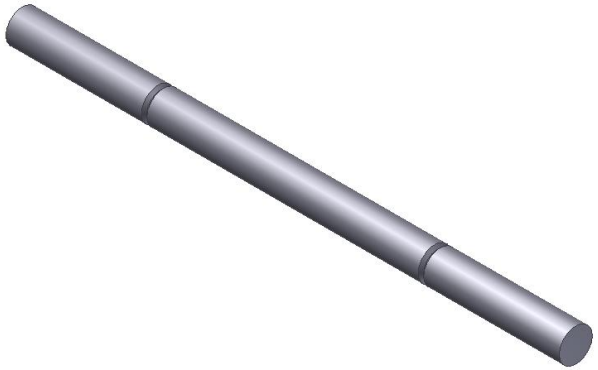

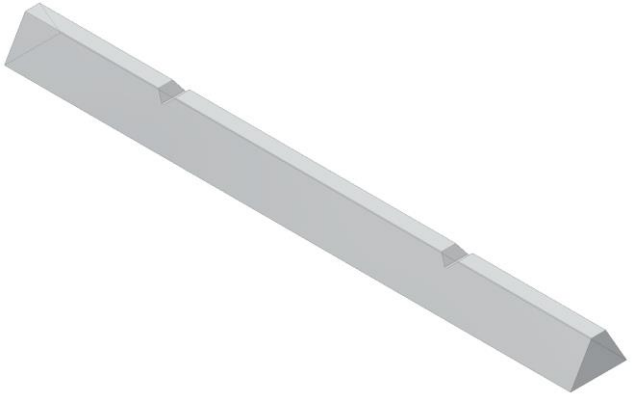

- Larger diameter
- Deeper groove

- Prism
- Deeper groove
- Straight groove

Recoil mass

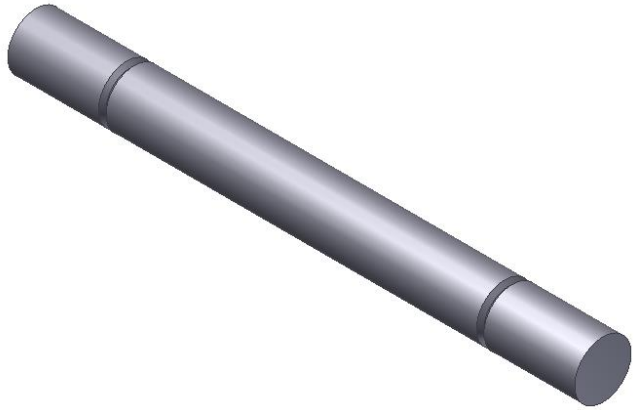

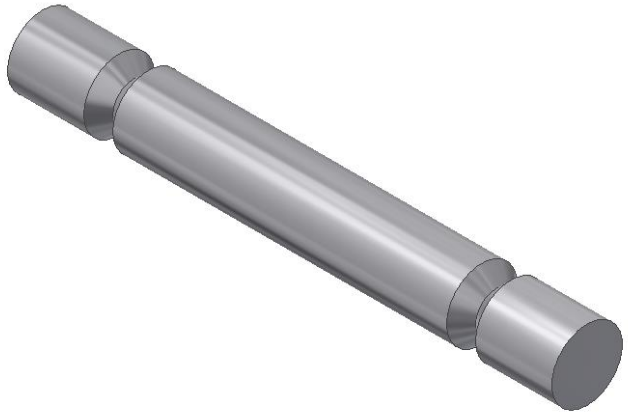

No prisms for the recoil mass

Wire breakers prisms with glass beads

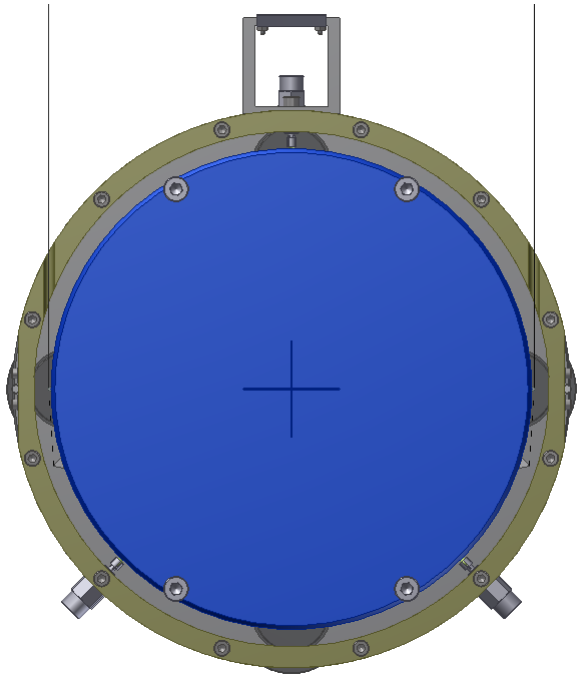

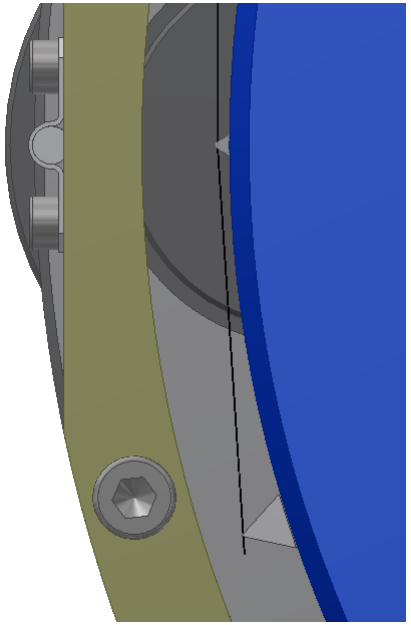

Primary

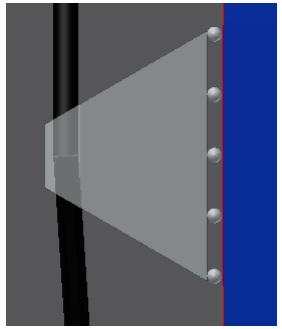

Primary wire breaker

- BS: sapphire
- PR2, PR3, TMx, TMy: AISI 304

Secondary wire breaker

- AISI 304 for all suspensions

Secondary

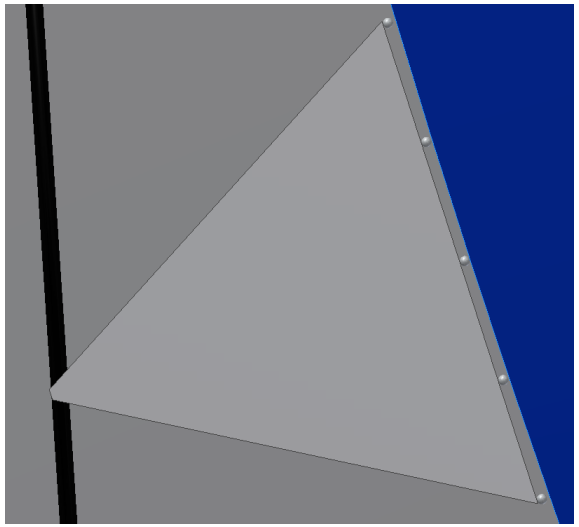

- A minimum adhesive layer thickness will be achieved by using 120 µm glass beads.
- UHV compatible adhesive: EP30-2 by Masterbond.

Sapphire wire breaker: prototype sample 1

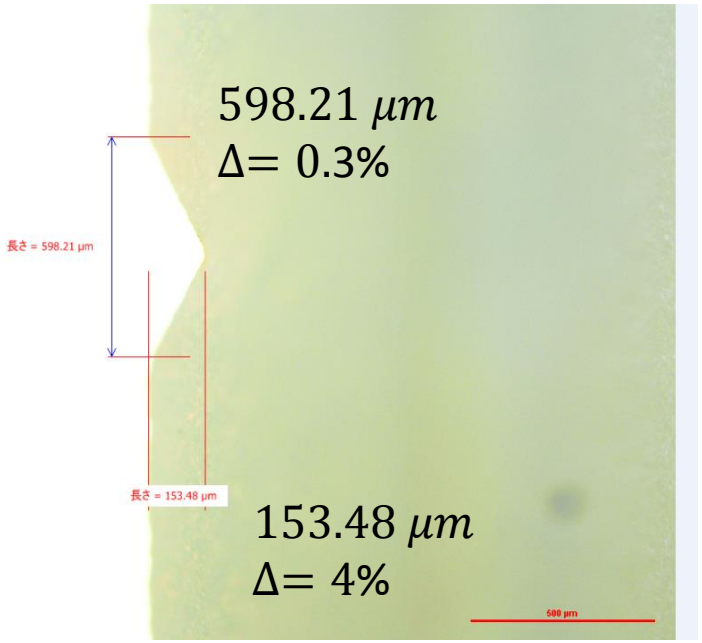

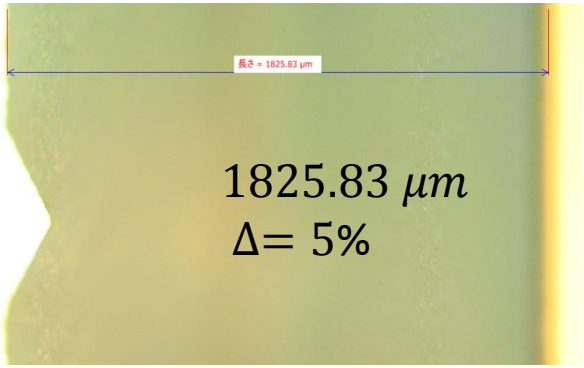

Grooves made with laser ablation by Shinkosha.

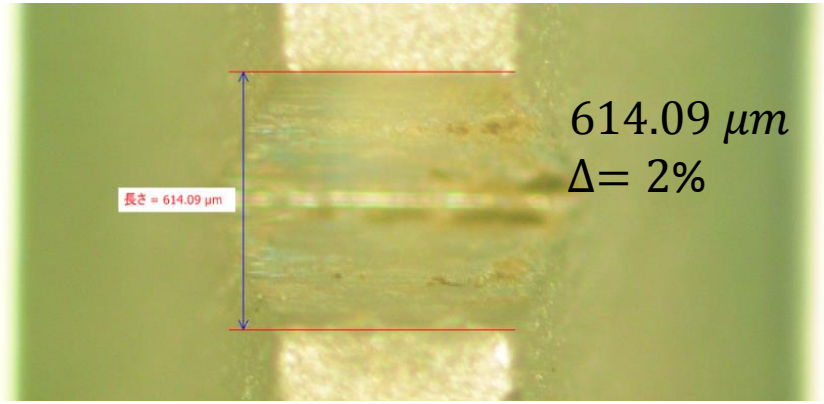

Sapphire wire breaker: prototype sample 2

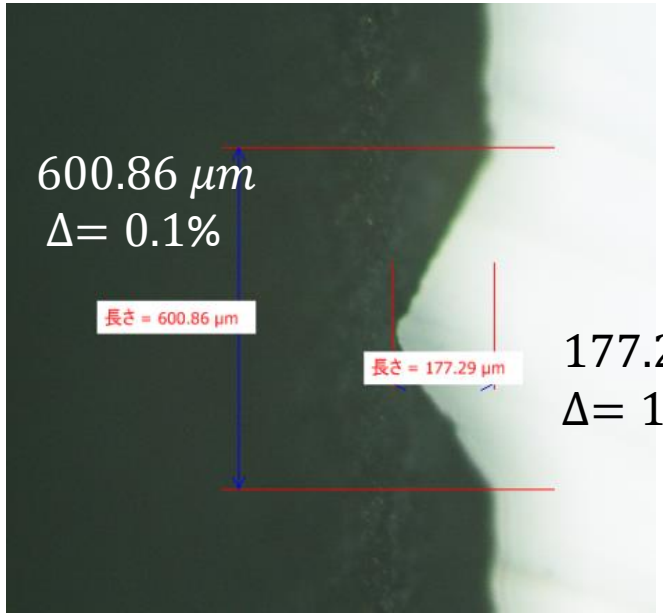

Grooves made with laser ablation by Shinkosha.

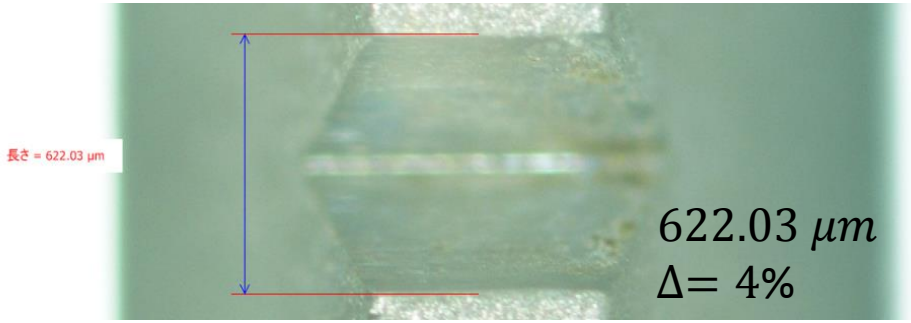

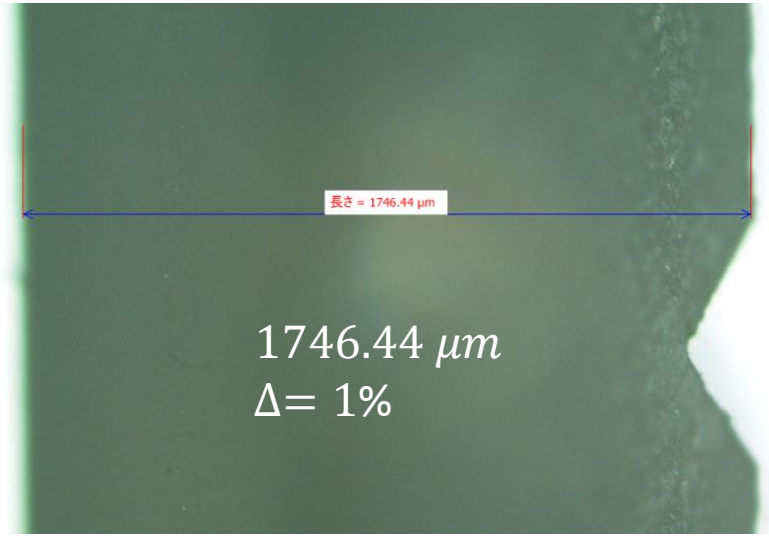

- **Dimensions look acceptable.**
- **Jigs have to be made.**
- **Procedure must be tested.**

OSEMs and optical lever: the problem

In the **+** configuration the OSEM are on the way of the optical lever.

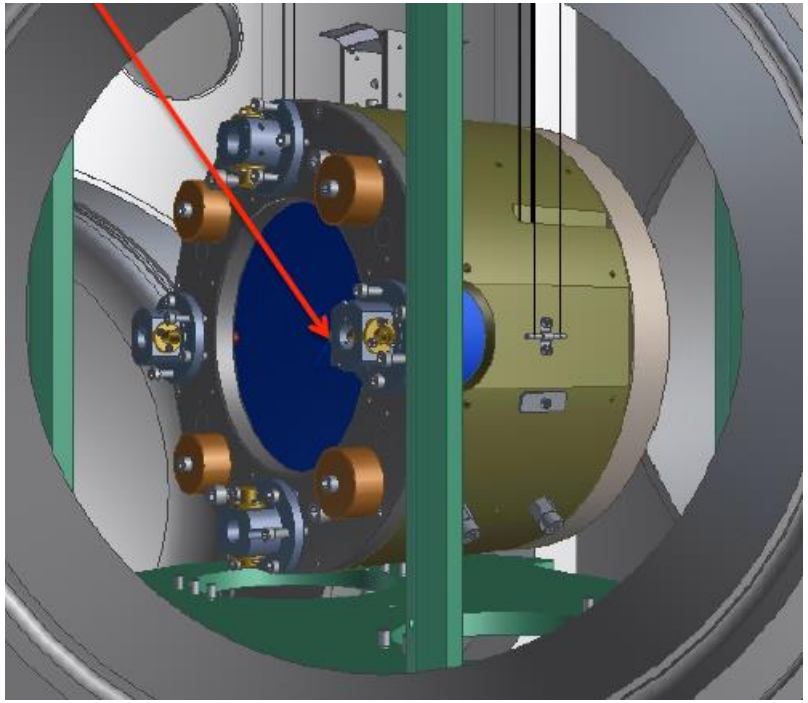

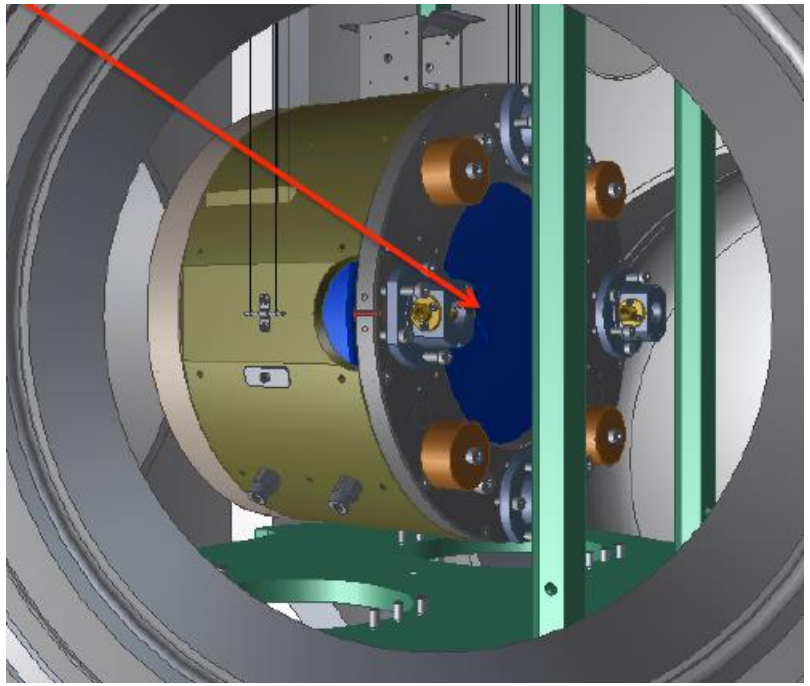

The red arrows point onto the center of the mirror. Source: Akutsu-san

OSEMs and optical lever: the solution

In the × configuration the OSEMs stand clear from the optical lever.

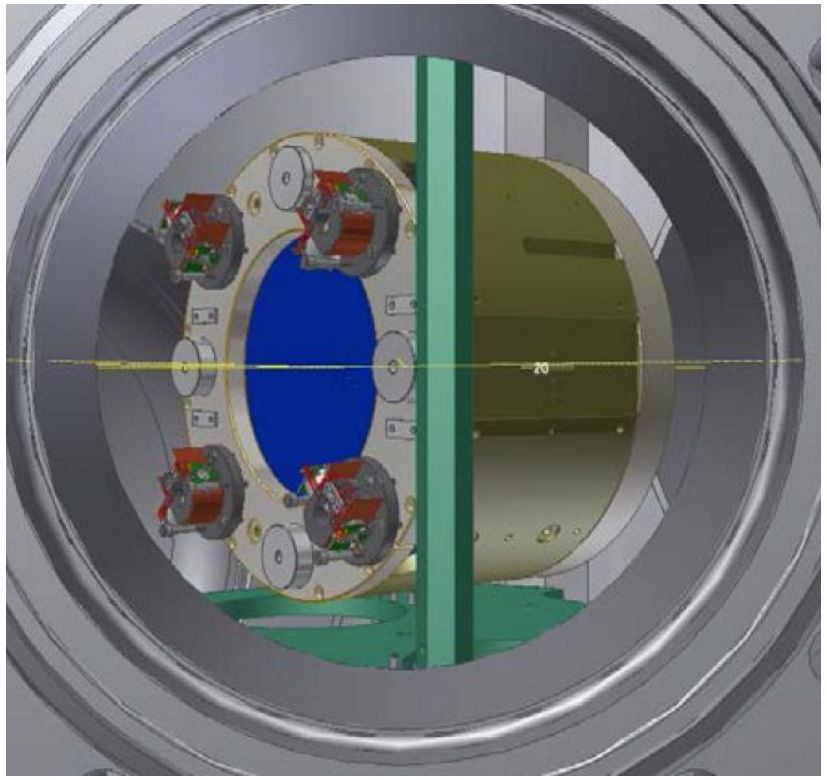

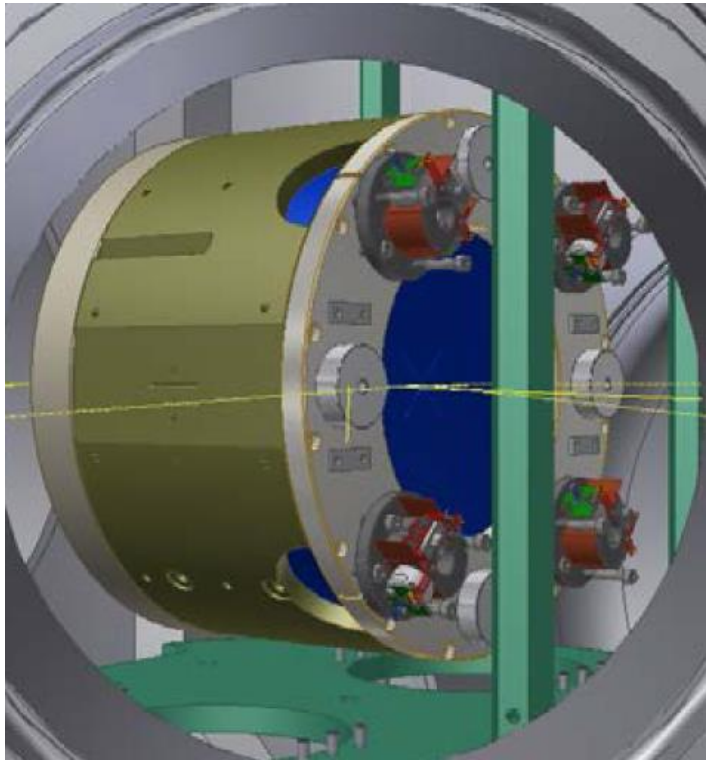

Source: Hirata-san

Viewports for visual inspection of wire breakers

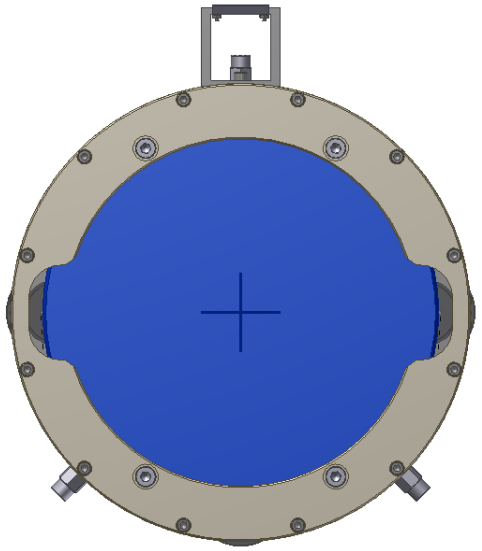

Before

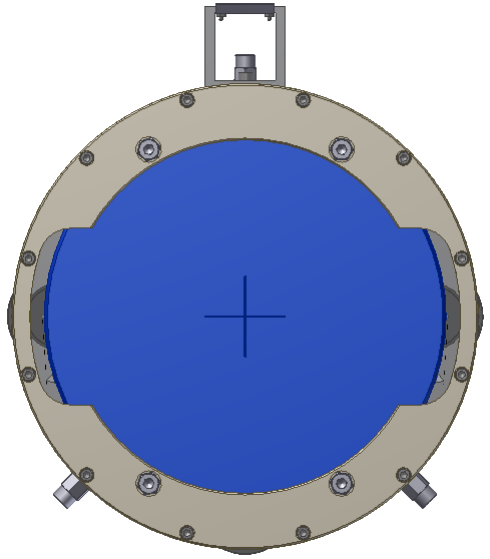

After

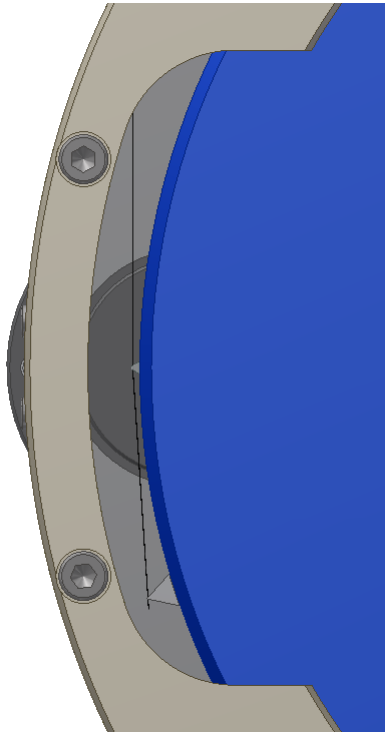

Detail

Other changes

- Light scattering: guidelines given by Simon Zeidler from AOS.
- New front lock for the RM. (Used to be a side lock.)
- Many features were modified for ease of manufacture and for cable clamps.

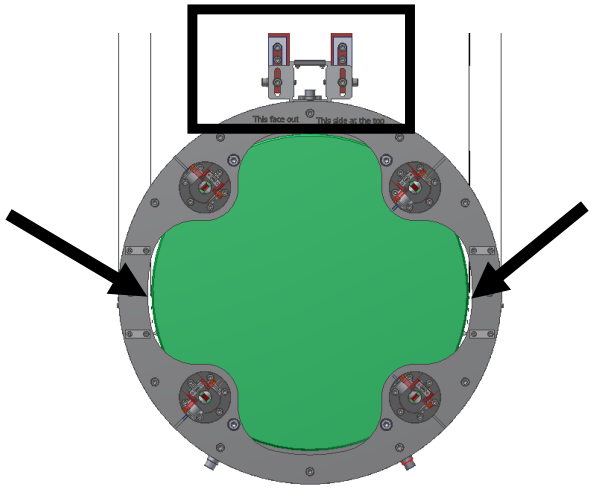

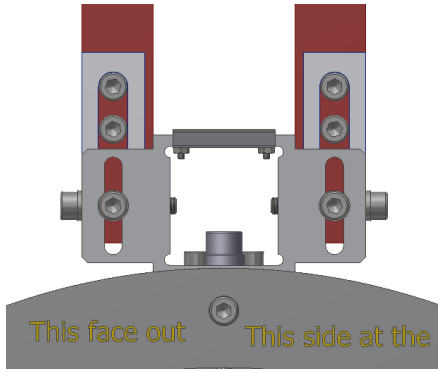

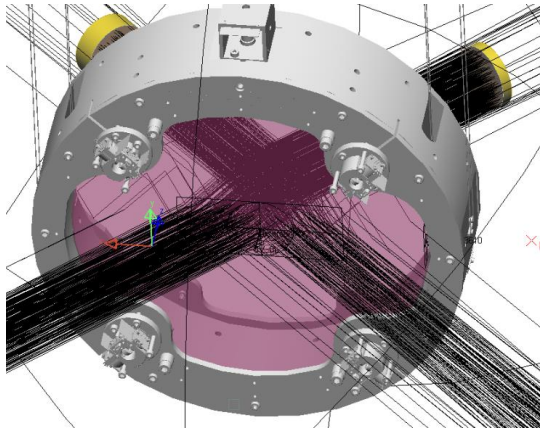

Source: Zeidler-san

Examples of quantitative results

Open loop gain from virtual actuators to virtual sensors with no control system.

Intermediate mass longitudinal mode

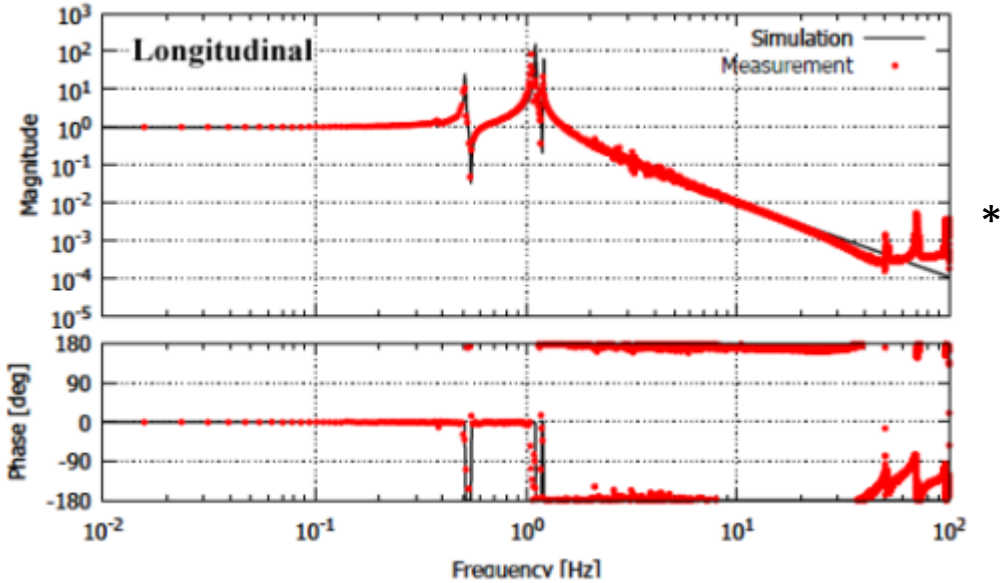

Test mass longitudinal mode

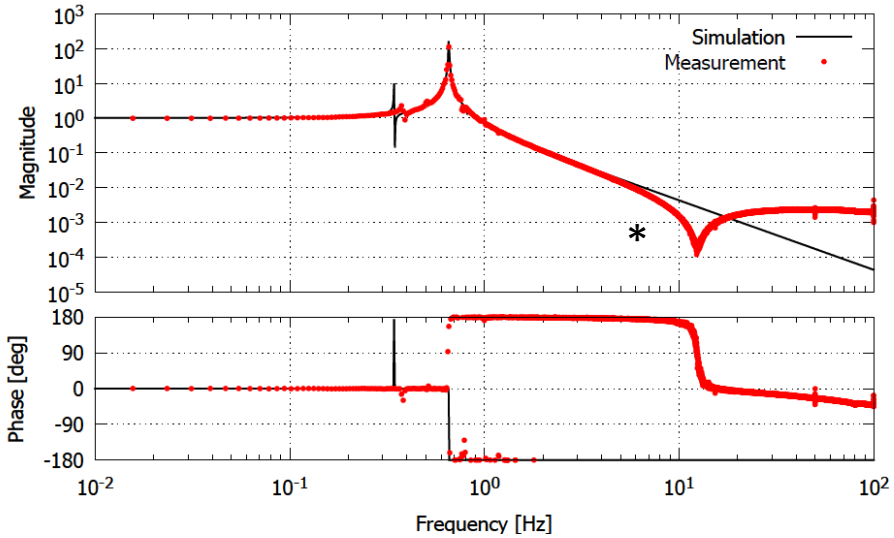

- **The bottom filter was unlocked.**
- Good agreement between the predictions and the experiments.
- More details will be given at Sekiguchi's presentation

Conclusions

Following our experience in the assembly of the prototype we have carried out many changes to the mechanical design:

- More stable and easier to assemble, align and manufacture.
- Allows the optical lever to work.

There are still, however, important procedures that must be outlined and tested:

- Gluing wire breakers.
- What to do in case an OSEM flag falls off.