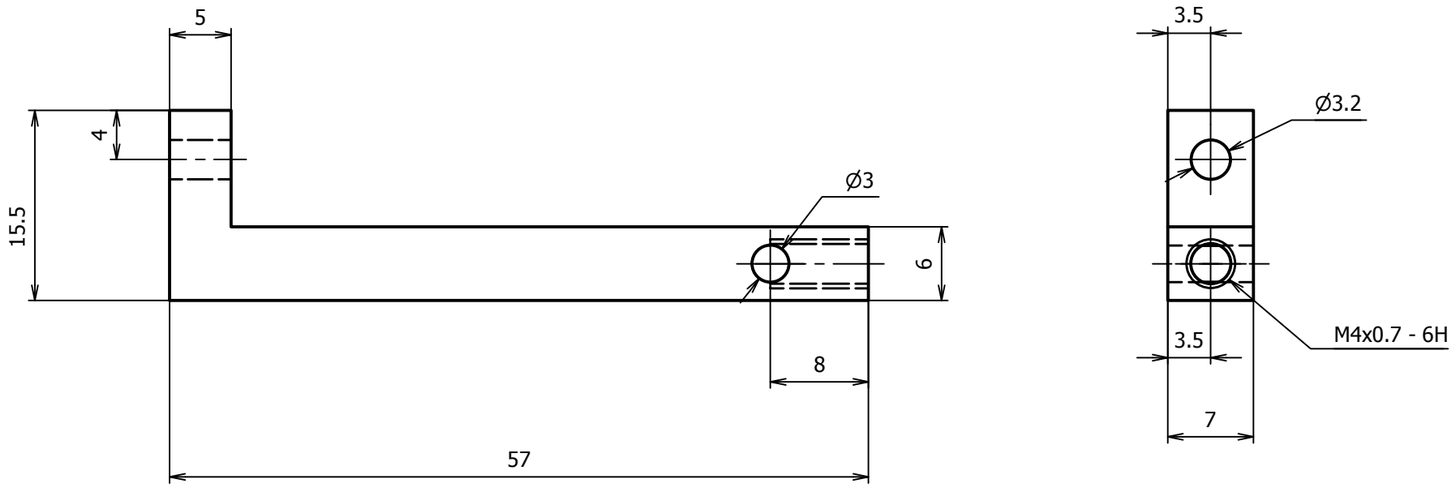

Material: Aluminum			KAGRA Project
	NAME	DATE	KAGRA-SAS FISHING ROD
DESIGNED	T. Sekiguchi	2014/07/28	L-angle to keystone for standard filter
CHECKED			
APPROVED			
2:1	THIRD ANGLE PROJECTION		KAGRA-VIS-FR-15

1 / 1

REV:1

A3