Report on KAGRA detector characterization

Detector characterization group

Detector Characterization

- Evaluation of data quality
  - Determine which data segment is available for science.
- Support diagnostics: --> help to shorten the commissioning period
  finding non-stationary components, artificial lines in channels.
  It will help to kill noise sources before KAGRA observing.
- Distribution of Veto information

- Detchar system in a pre-process server.
- Evaluation/setting of PEMs with GIF
- System to distribute veto info to other collaborations.

- The unique information of KAGRA should be taken care within detchar
  so that other collaborators are not concerned about it to some extent.

Interfaces

KAGRA GW telescope

PEM, Aux. channels, Online-monitors, diagnostics

Detector Characterization

Veto info, target veto, Data quality, calibration accuracy

Data Analysis

- **Channels: Interfaced with many subsystems**

Flow Chart

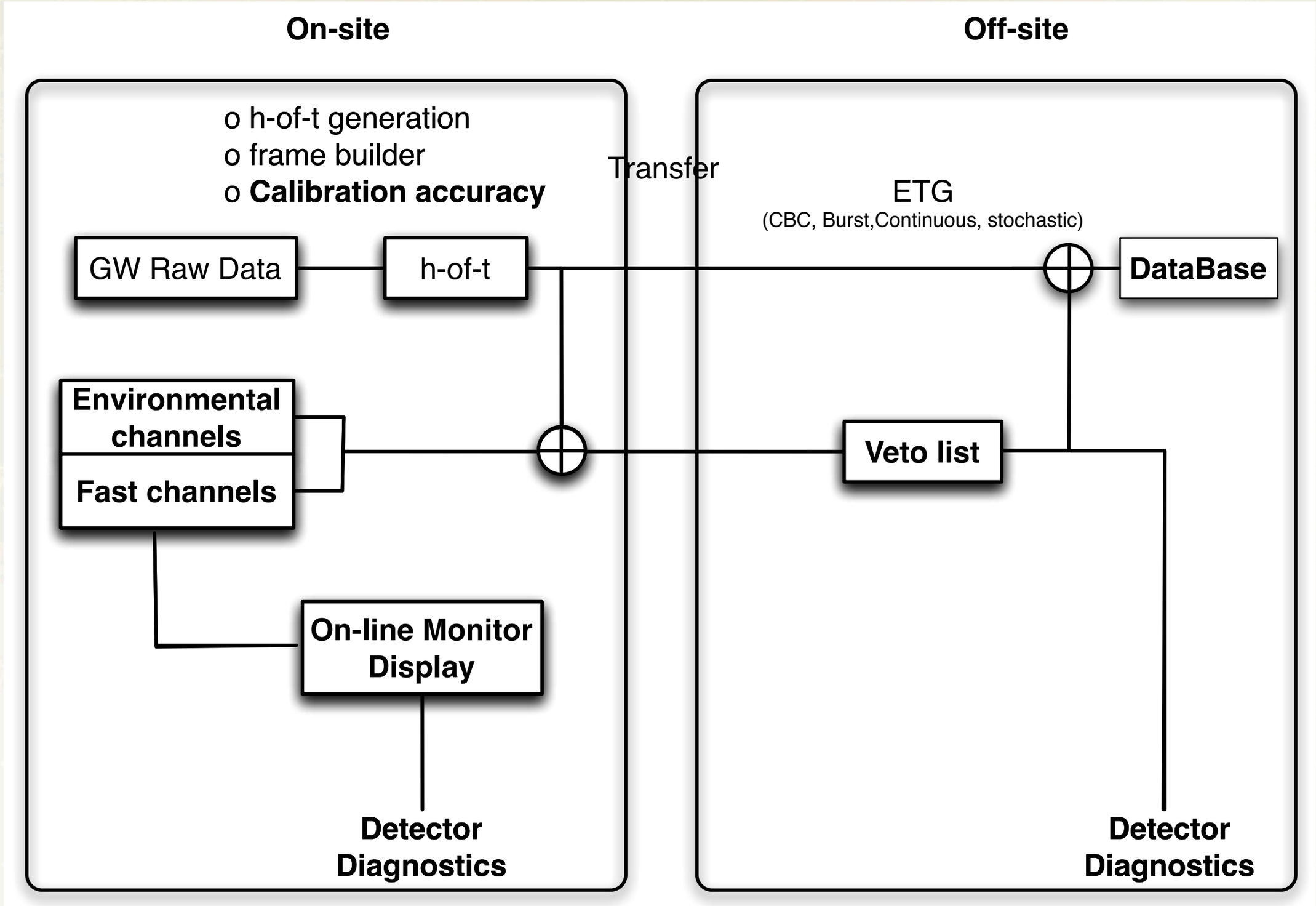
On-site
Off-site
o h-of-t generation
o frame builder
o Calibration accuracy
Transfer
ETG
(CBC, Burst,Continuous, stochastic)
GW Raw Data
h-of-t
DataBase
Environmental channels
Fast channels
Veto list
On-line Monitor Display
Detector Diagnostics
Detector Diagnostics

Physics and Environmental Monitors

Selecting Physics and Environmental Monitor (PEM) (GIF)

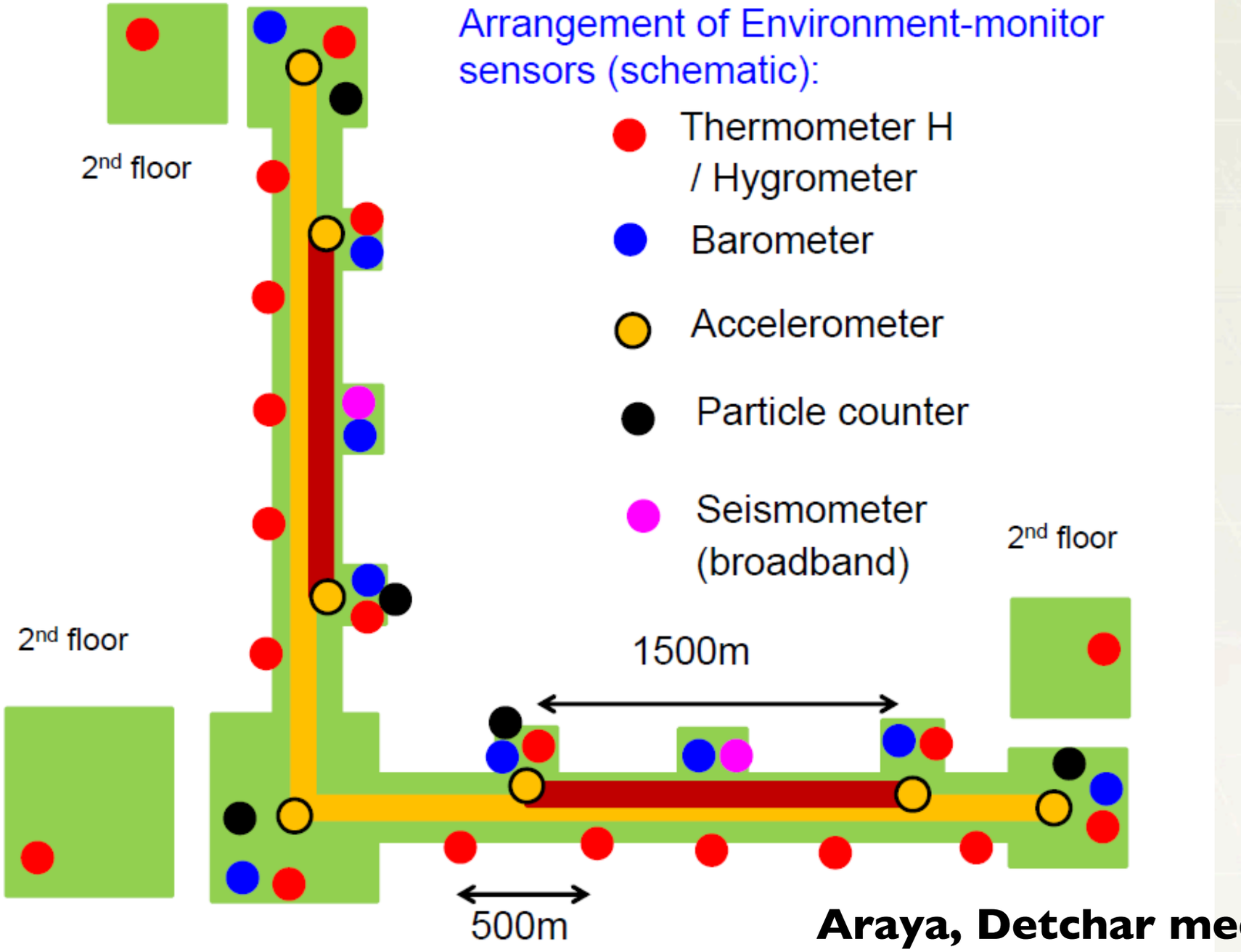

Araya, Detchar meeting in May 2012

Detchar Base System

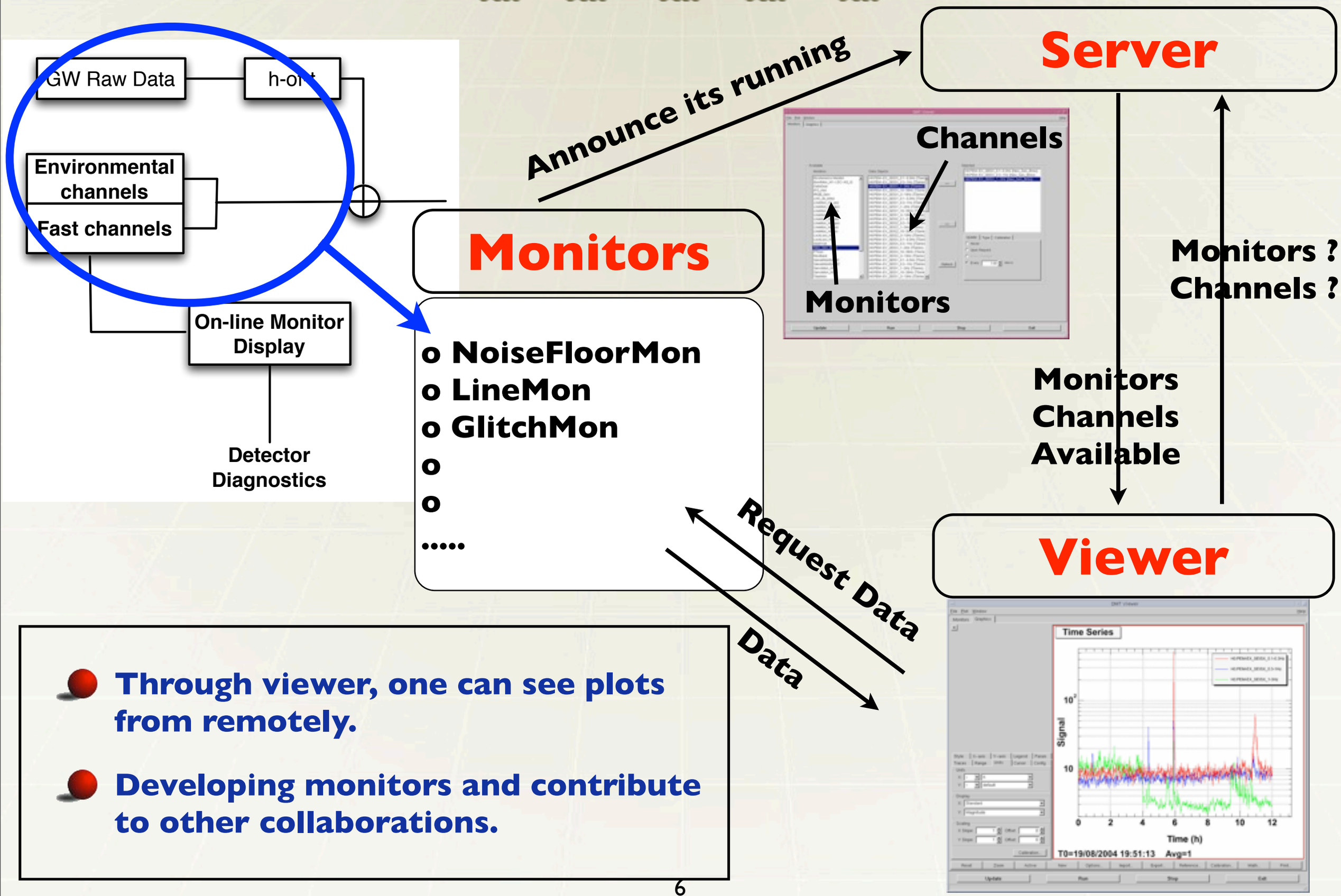

- Through viewer, one can see plots from remotely.
- Developing monitors and contribute to other collaborations.

Developing the system on digital at NAOJ

Hayama(NAOJ), Miyakawa(ICRR), Yamamoto, Yuzurihara(OCU), Susa(Titech), Dan (UT)

- Simple standalone system (RT PC + ADC, Client WS, router) has been delivered to NAOJ on 12/6/2011.
- 3days work for installation, lecture and training
- Online analysis software will be developed by DAS group.

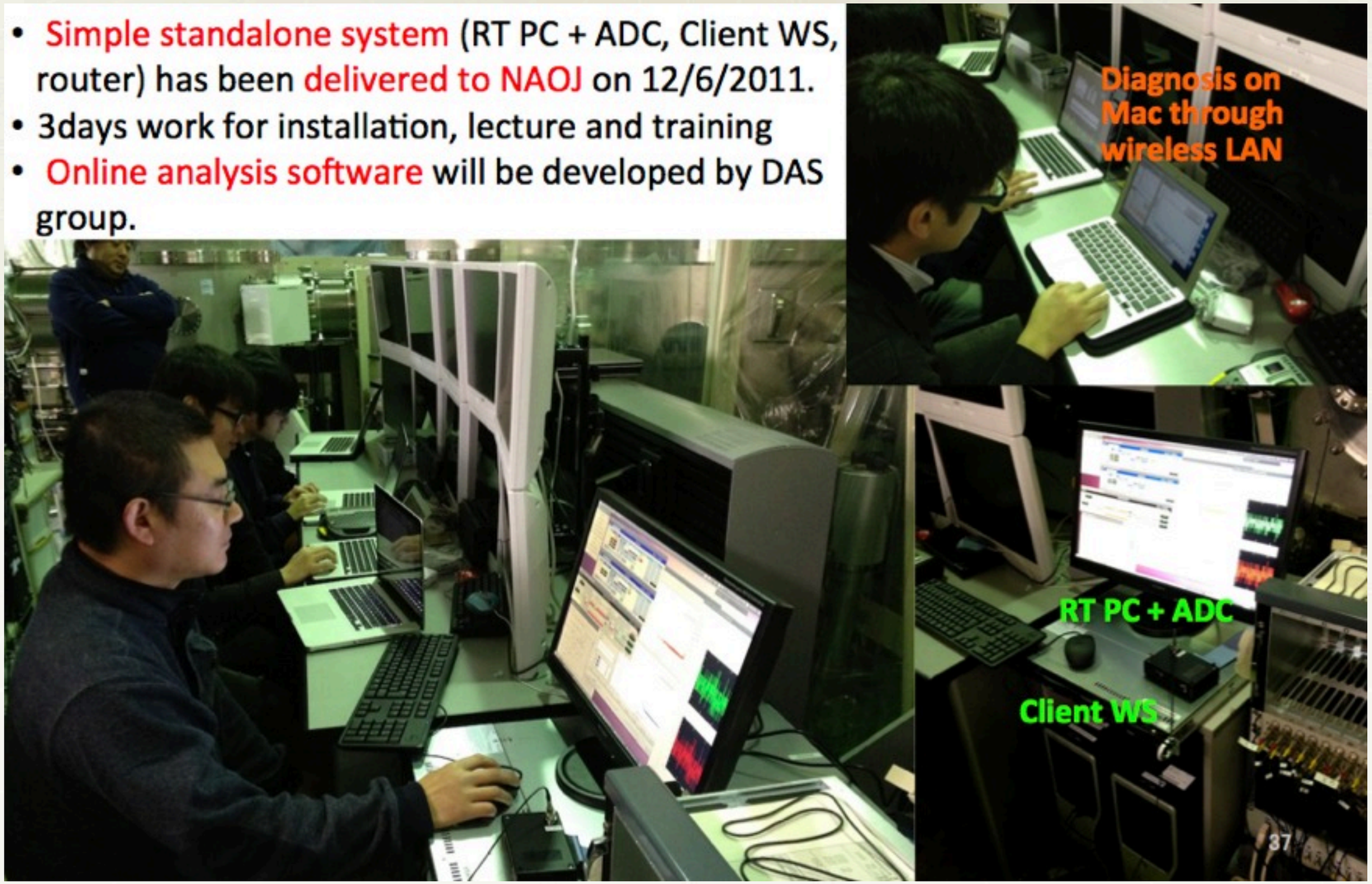

Data quality analysis

- **Data quality information**
  - **Real-time segment-database generation**
    Data quality information of science mode, lock, calibration, ...
  - **Categorization**
- **Triggered event database**
- **Real-time veto analysis**
- **Daily Report tool**

For Event Searches

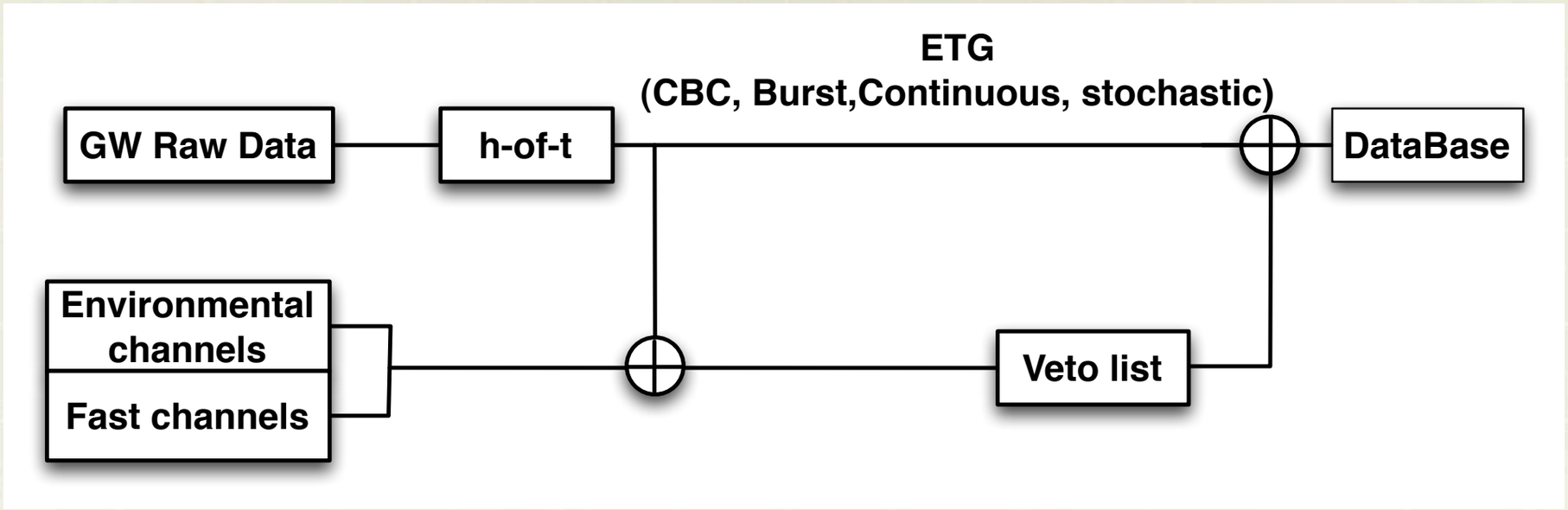

Veto list generation

Transient GW (CBC, Burst)	Continuous GW (pulsar, LMXB, ...)	Stochastic GW (Early Univ, ...)
• Real-time glitch detection • Glitch classification • Coincidence analysis between the GW channel and auxiliary sensor channels. • ...	• Line tracking • Line detection • Removal of high frequency spikes • ...	• Noise floor monitor • Non-stationary • ...

Software Development

- **Import of LVC software**
  - **Data quality monitor (Not all, but some)**
  - **Glitch detection pipeline (Several pipelines, need sophistication in progress.)**
  - **Coincidence analysis pipeline <- collaboration with UTB**
- **New software requirement / sophistication**
  - **Noise modeling (power spectrum and, probably, glitch) (New method developed. Next slide)**
  - **Multivariate analysis <- collaboration with Korea GW.**
  - **Glitch classification (One paper accepted.)**

New Noise Modeling

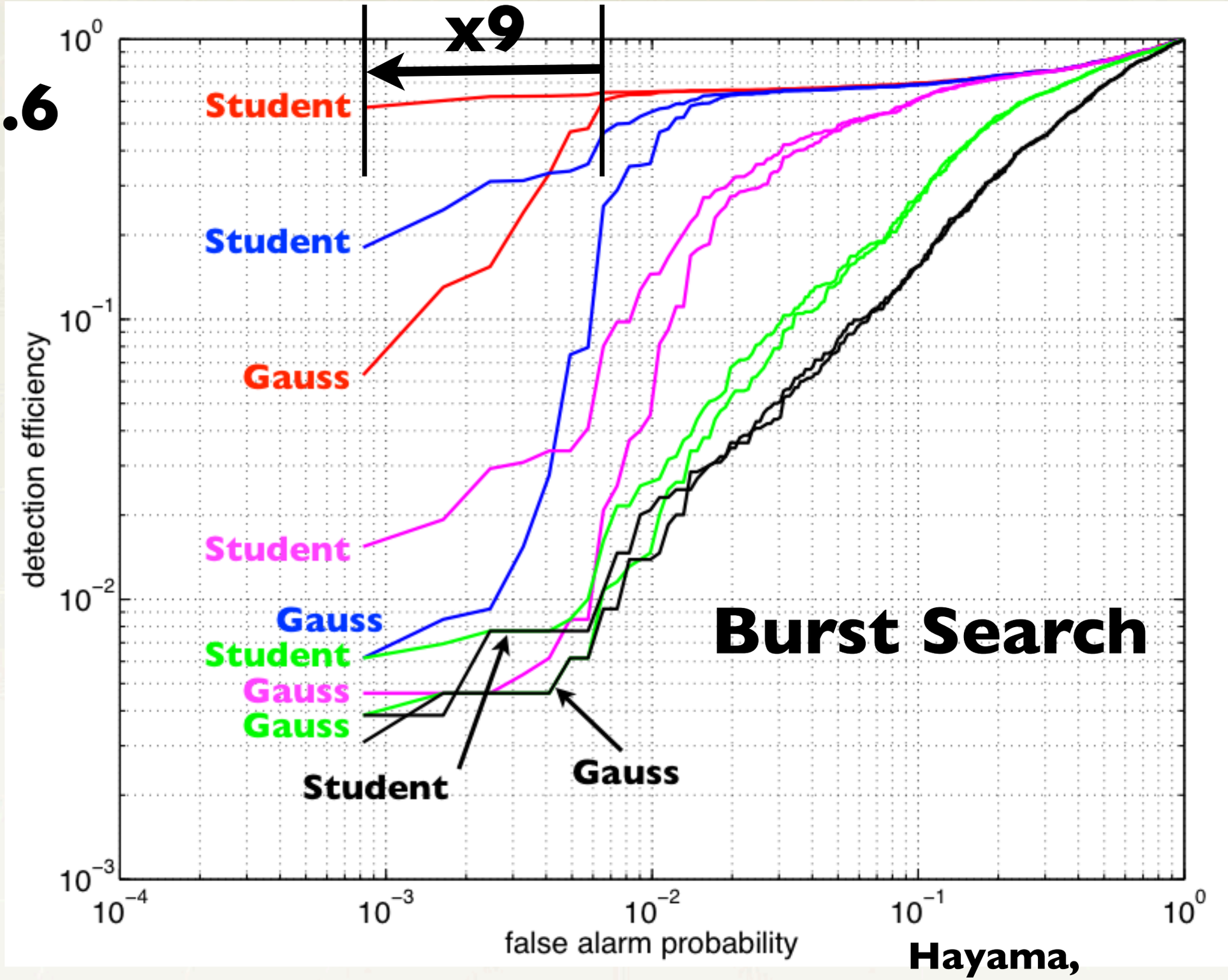

Hayama,
paper submission ready

Application of ANNs to Glitch Identification Study using Auxiliary Channels

John J. Oh[1], Sang Hoon Oh[1], Young-Min Kim[1,2], Chang-Hwan Lee[2], Edwin J. Son[3], Ruslan Vaulin[4] , Lindy Blackburn[5]

[1] National Institute for Mathematical Sciences [2] Pusan National University
[3] Sogang University [3] MIT [4] Goddard Space Flight Center, NASA

Goals: Applying artificial neural networks (ANNs) to auxiliary channel information,

- ✦ Provide a highly efficient and reliable noise transient (glitch) identification tool
- ✦ Develop a method to trace down the culprit channel(s) causing noise transient in strain data
- ✦ Potentially establish a new ranking statistic useful for CBC search

Schedule

I. **Prototype test in CLIO**
- o Installation test of detchar basic system at NAOJ.
- o Test operation of detchar basic system during CLIO operation.
- o Software development.

Will do ~this fall.

II. **Computation platform**
- o 2Q-4Q2014: Implementation of detchar system in a pre-process server.
- o 1Q-3Q2015: Installation of the pre-process server to a building.

III. **Test operation**
- o Operation of the detchar system during GIF operation from ~ June, 2015.
- o Operation during iKAGRA in ~ Nov. 2015.
- o Software development

IV. **Operation**
- o Operation during bKAGRA from ~ Aug. 2018.