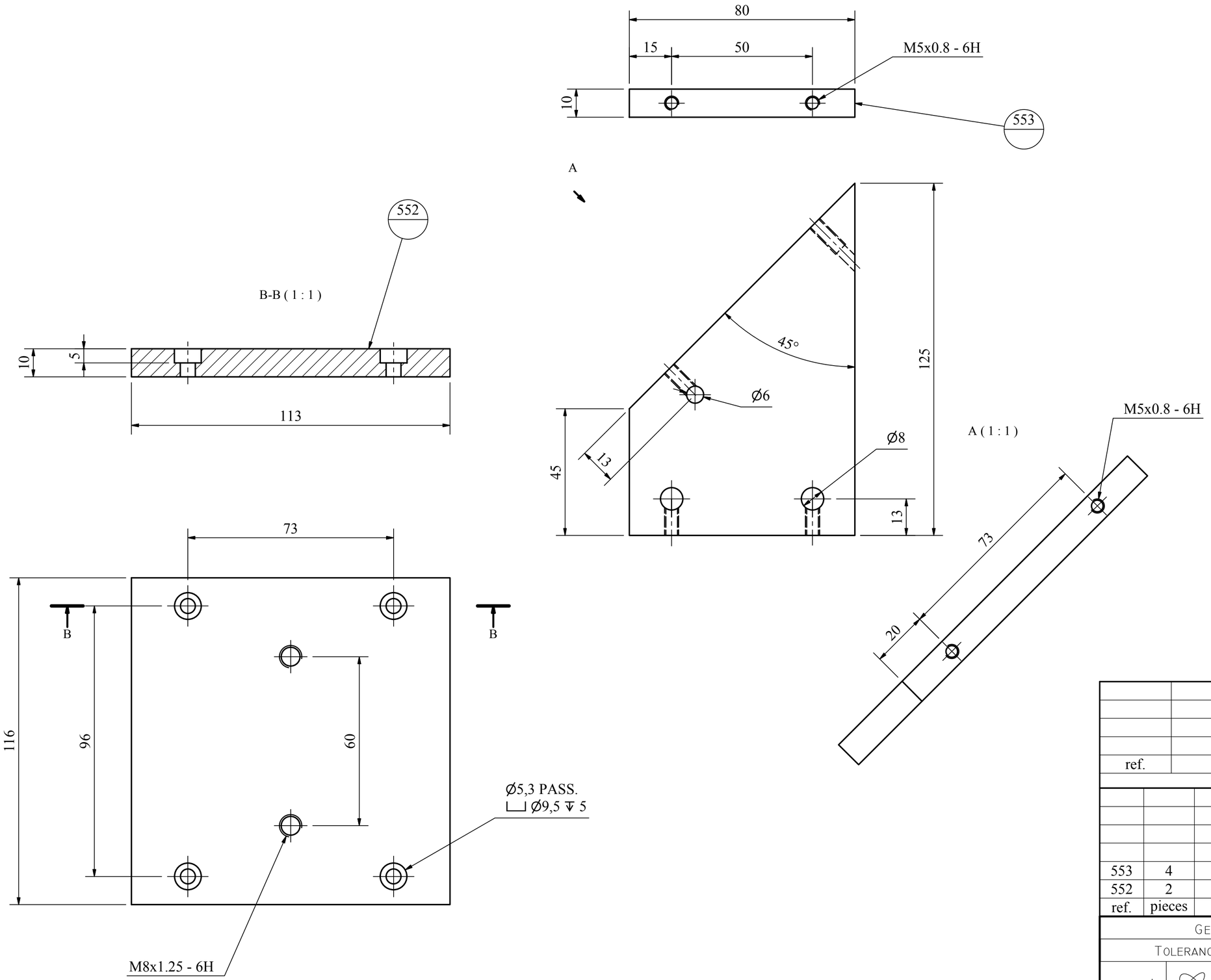

ref.	note	date
modifications		

ref.	pieces	material	scale
553	4	EN 6082	1:1
552	2	EN 6082	1:1

GENERAL TOLERANCE mK

TOLERANCE SYSTEM: ISO 2768-2 CLASS H-K-L

PROMEC
di Gennaro Gianni
BIENTINA (PISA)-ITALIA

DESIGNED FOR: R. De Salvo
DRAW. BY: G. Gennaro
DATE: 05-04-12
SCALE: 1:1

TITLE
KAGRA-SAS
SAFETY STRUCTURE-Gr.15

N° DRAW.: KAGRA.11009-00
REPLACE DRAW N°
DETAIL FROM: 11003
A2