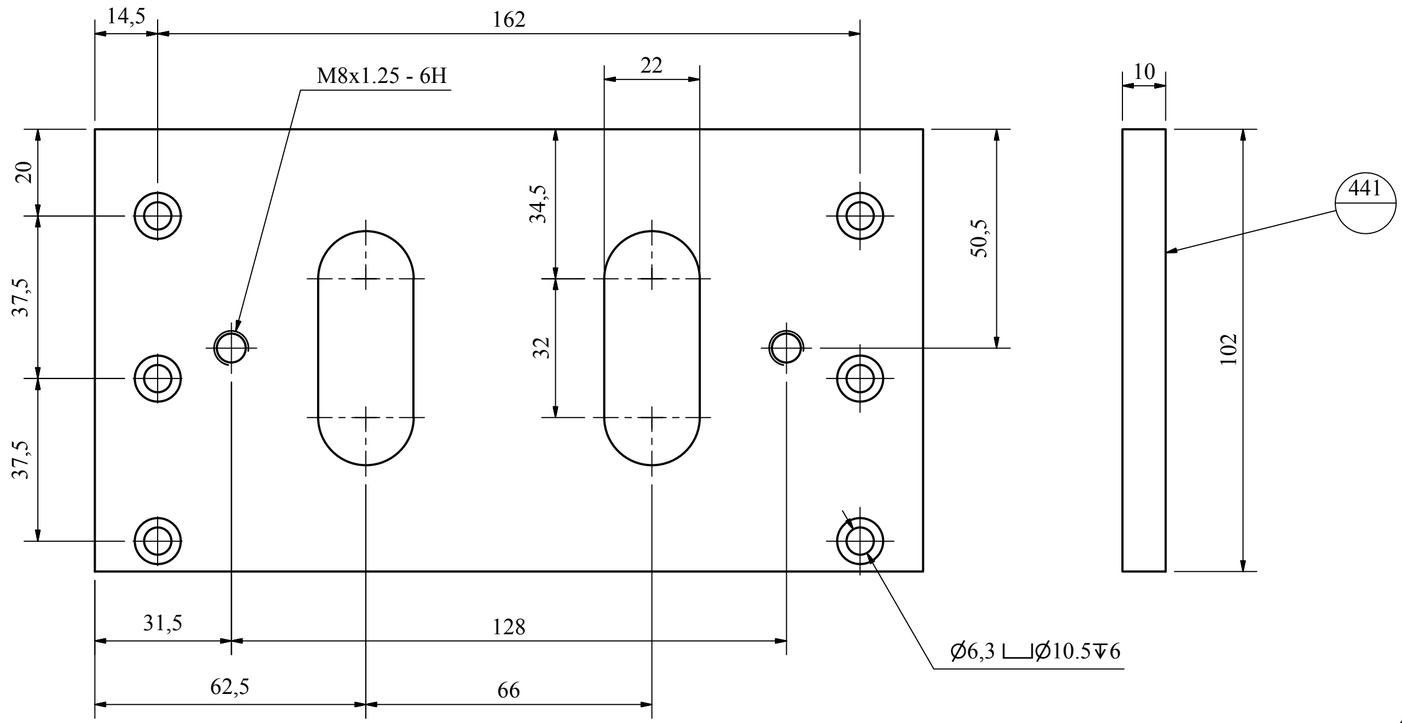

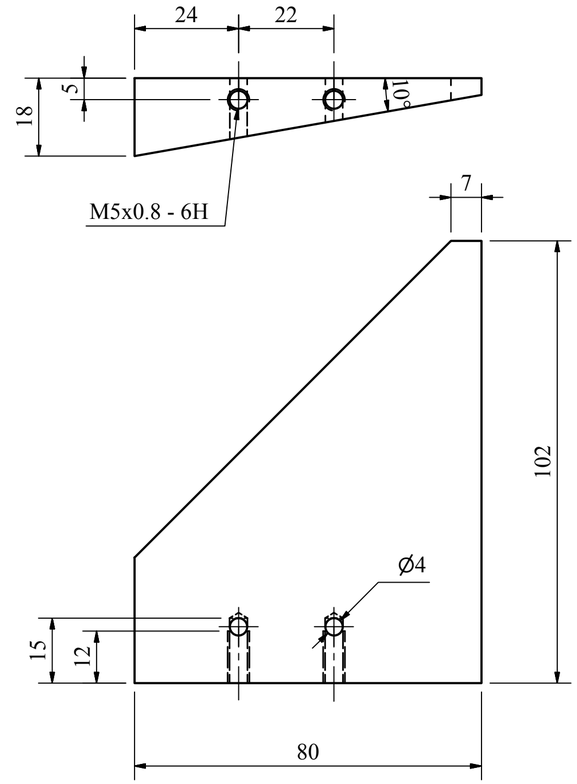

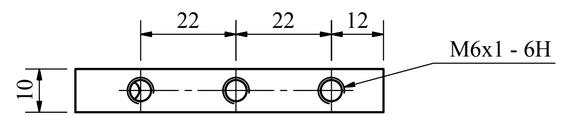

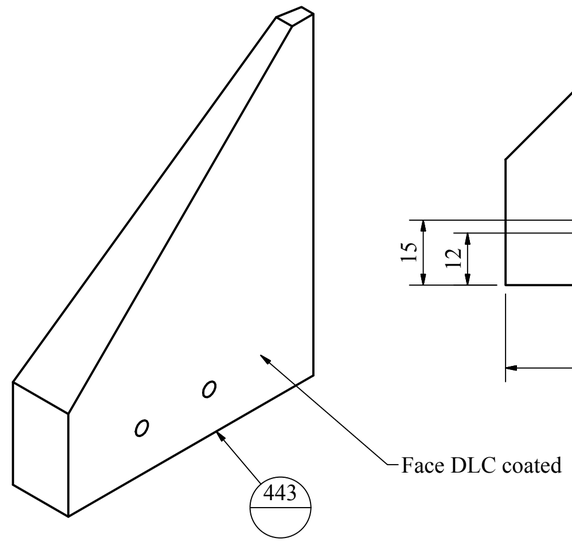

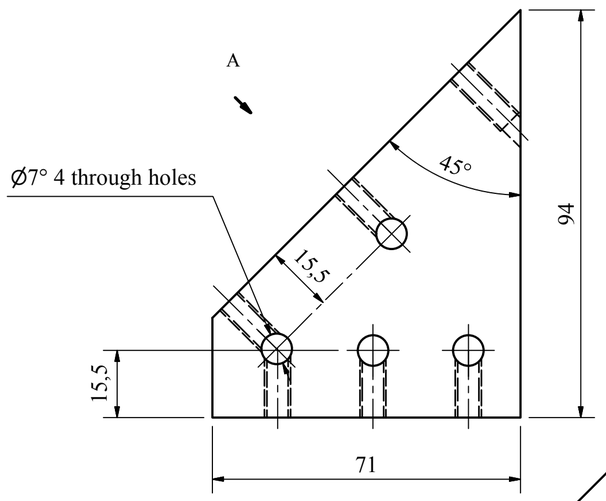

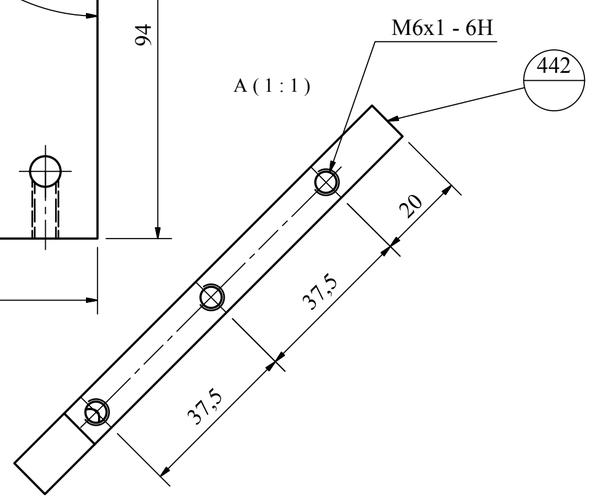

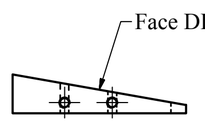

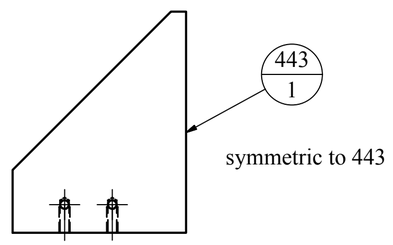

ref.		note	date
		added note	11-03-12

modifications

ref.	pieces	material	scale
443.1	1	EN 6082	1:2
443	1	EN 6082	1:1
442	4	EN 6082	1:1
441	2	EN 6082	1:1

GENERAL TOLERANCE mK

TOLERANCE SYSTEM: ISO 2768-2 CLASS H-K-L

PROMEC
di Gennaro Gianni
BIENTINA (PISA)-ITALIA

DESIGNED FOR R. De Salvo
DRAW. BY G. Gennaro
DATE 4-01-12
SCALE 1:1
N° DRAW LCGT.10014-01
REPLACE DRAW N°
DETAIL FROM 10005
A2

TITLE
LCGT-SAS
LOCKING RECOIL MASS-Gr.10