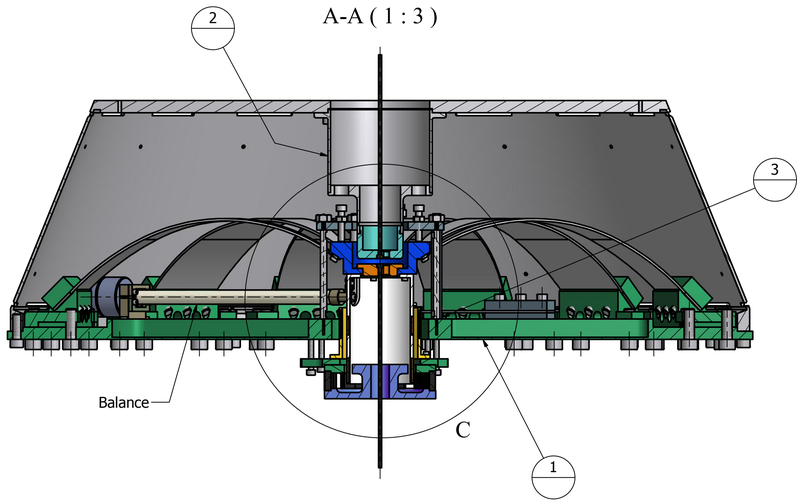

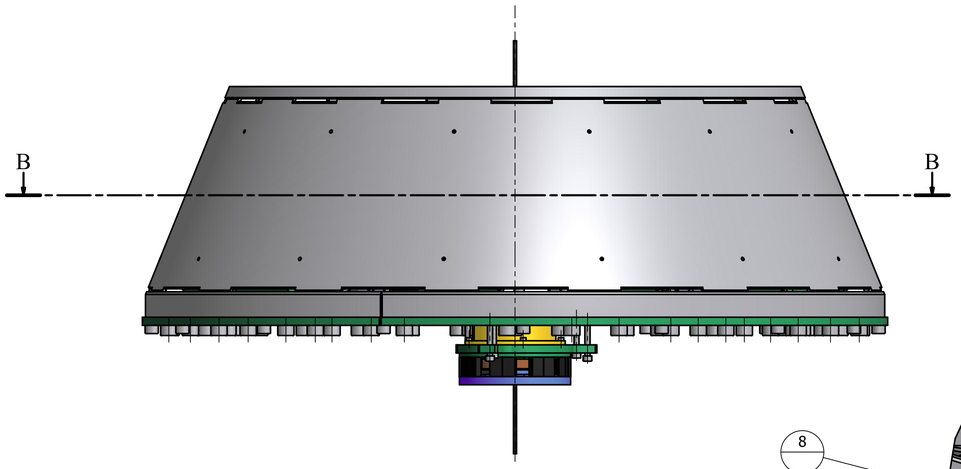

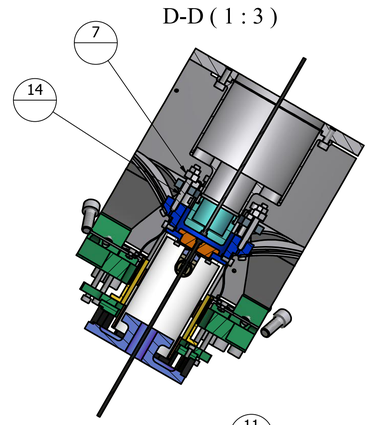

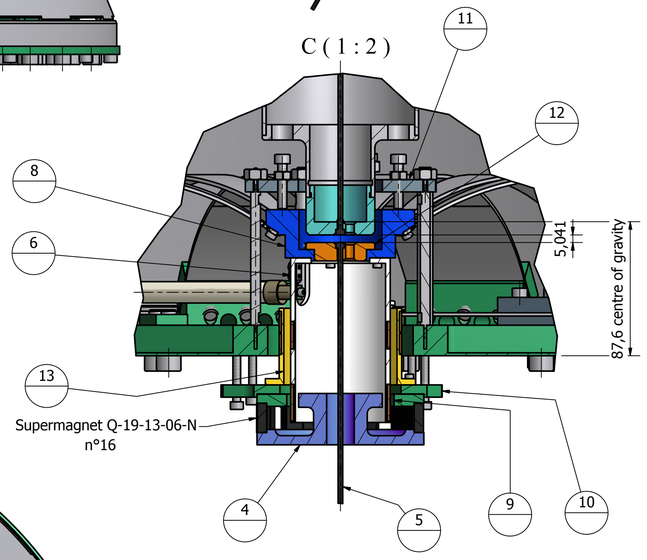

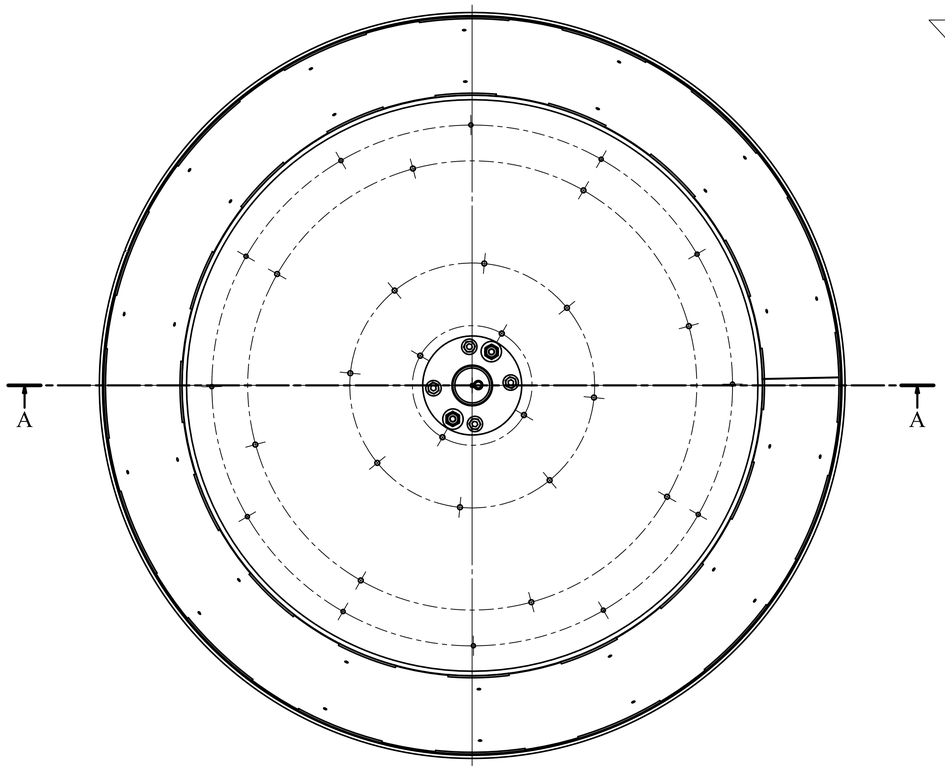

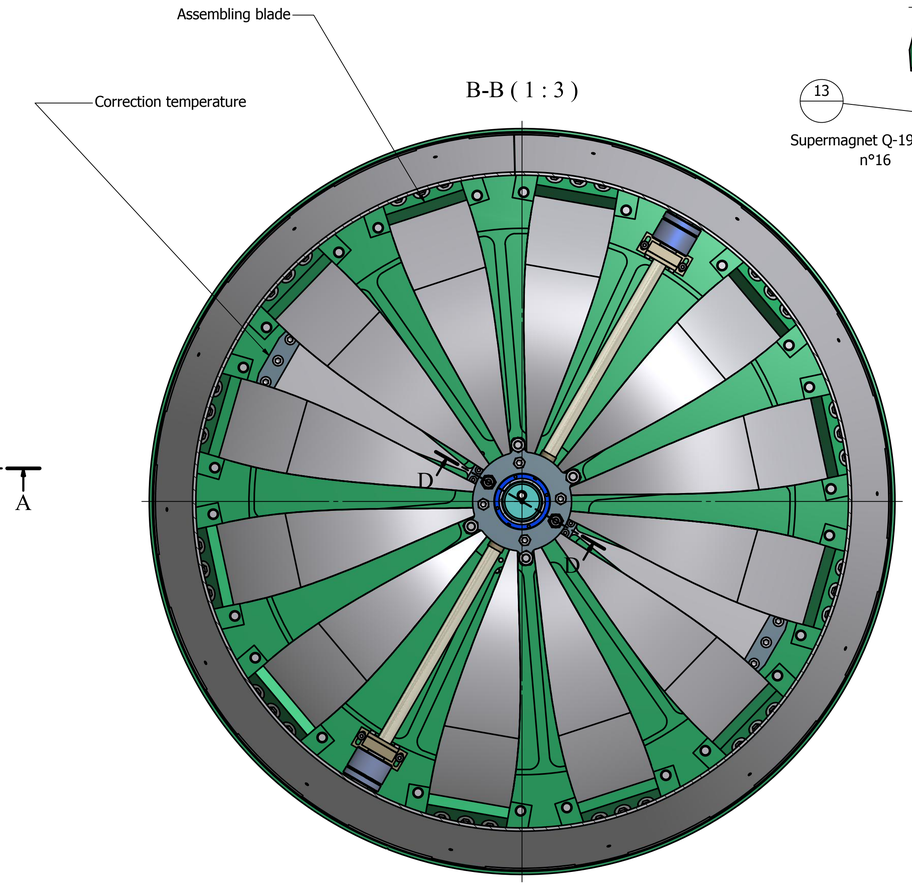

mass = 87,55 Kg

ref.	note	date
	modifications	

ref.	draw.	legend
14	0011	Threaded bar
13	0010	LVDT secondary
12	0012	Lower wire receptacle
11	0011	Range limiter ring
10	0009	LVDT adjustment plate
9	0009	Magnet yoke body
8	0011	Keystone
7	0011	Special nut
6	0010	LVDT-actuator coil
5	0012	Suspension wire
4	0009	Magnet yoke ring
3	0012	Range limiter column
2	0005-6-7-8	Shell
1	0004	Base plate
	0003	Thermal compensator
	0002	Magic wand
	0001	Blade assembling

PROMEC
di Gennaro Gianni
Bientina (Pisa)-Italia

DESIGNED FOR: R. De Salvo
DESIGN: G. Gennaro
DATE: 1-12-2010
SCALE: 1:3
TITLE: LCGT-SAS
FILTER STANDARD-Gr.1
ASS. NUMB.: Filter st.0000-00
REPLACE DRAW.N°:
A1

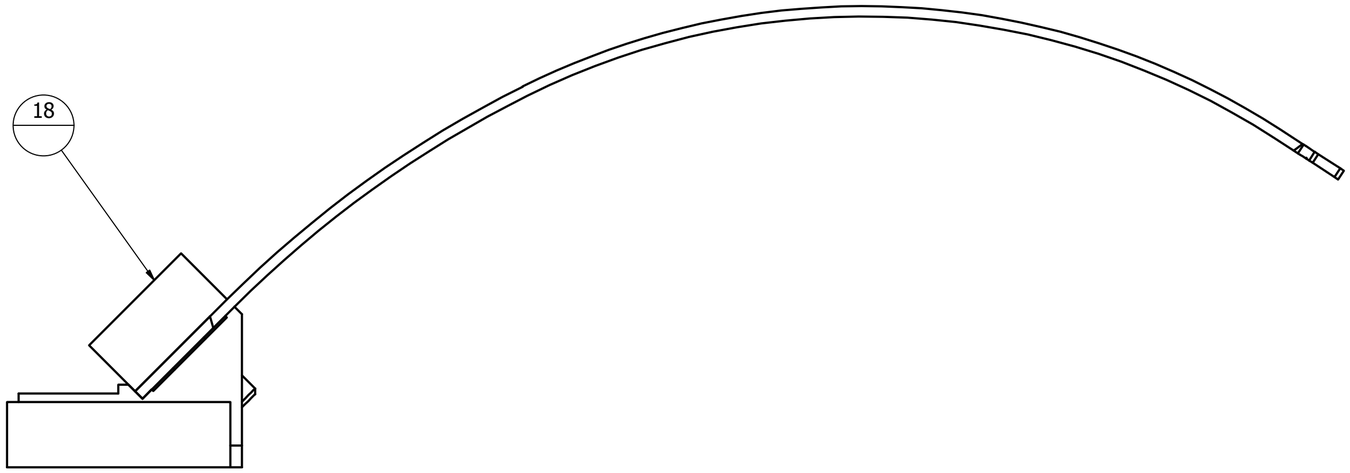

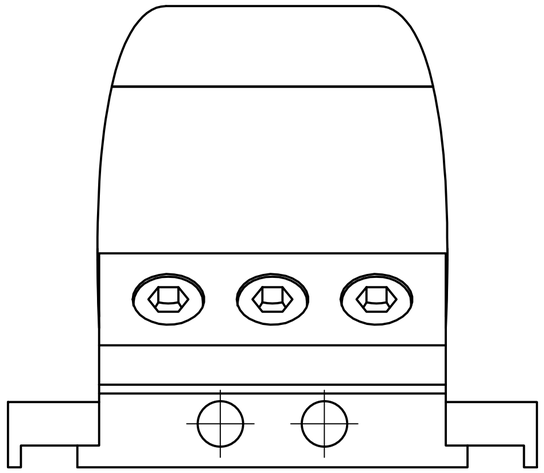

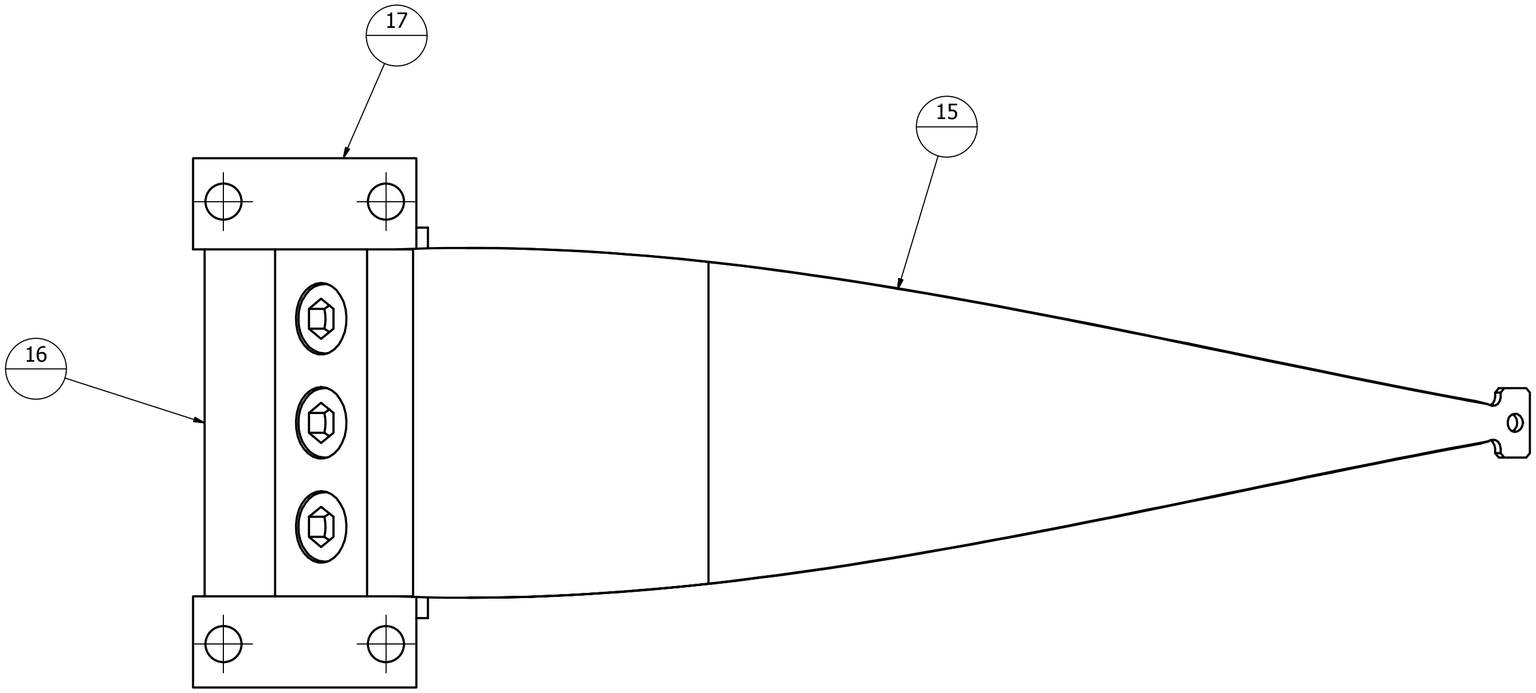

See drawing 0000

ref.	note	date
	modifications	

ref.	draw.	legend
18	0013	Blade clamp
17	0013	Blade clamp guide
16	0013	Blade clamp cap
15	0013	Blade

PROMEC
di Gennaro Gianni
Bientina (Pisa)-Italia

TITLE
LCGT-SAS
FILTER STANDARD-Gr.1
ASSEMBLING BLADE

DESIGNED FOR: R. De Salvo
DESIGN: G. Gennaro
DATE: 2-12-2010
SCALE: 1:1
ASS. NUMB.: Filter st.0001-00
REPLACE DRAW.N°:
A2

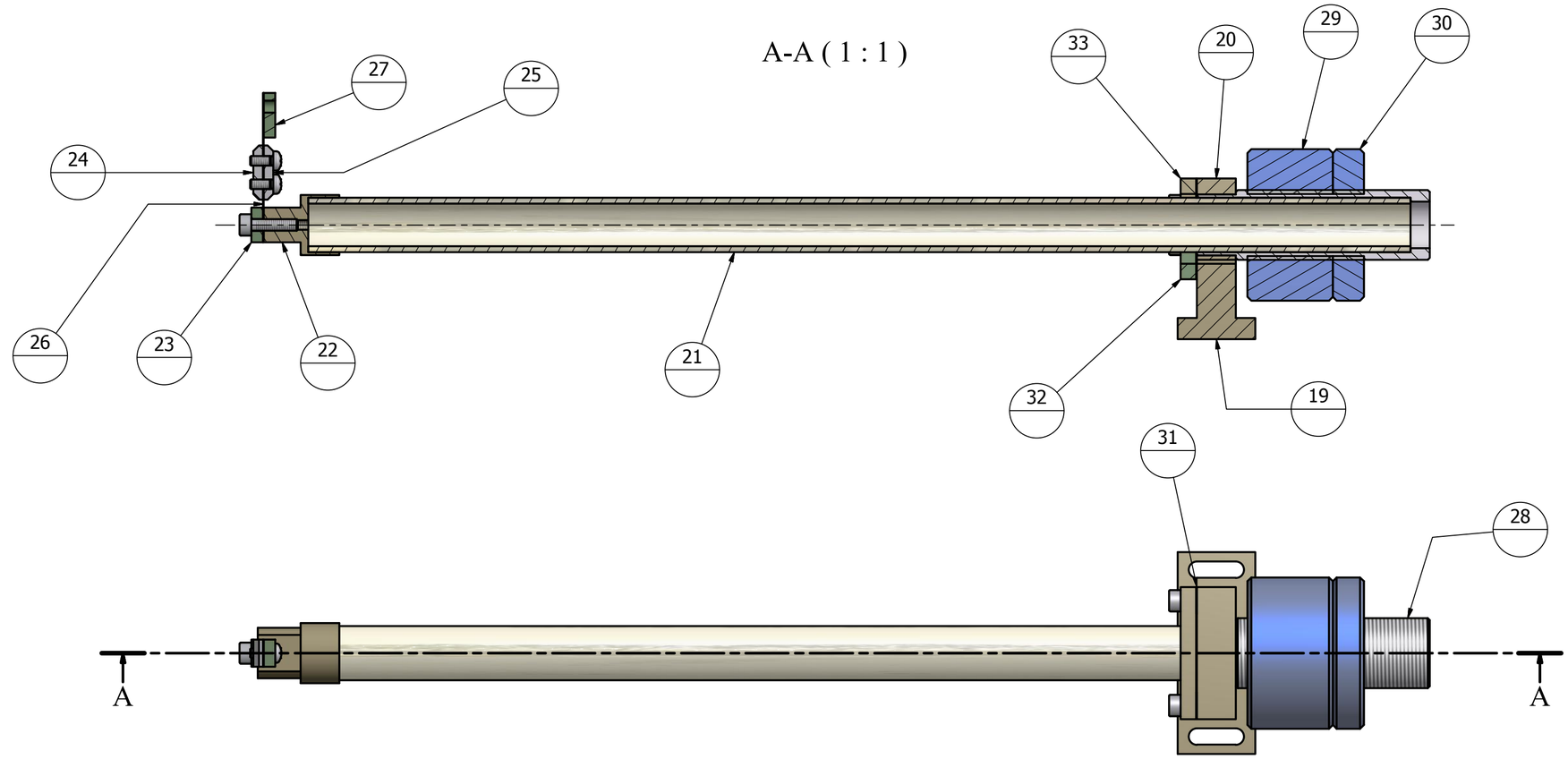

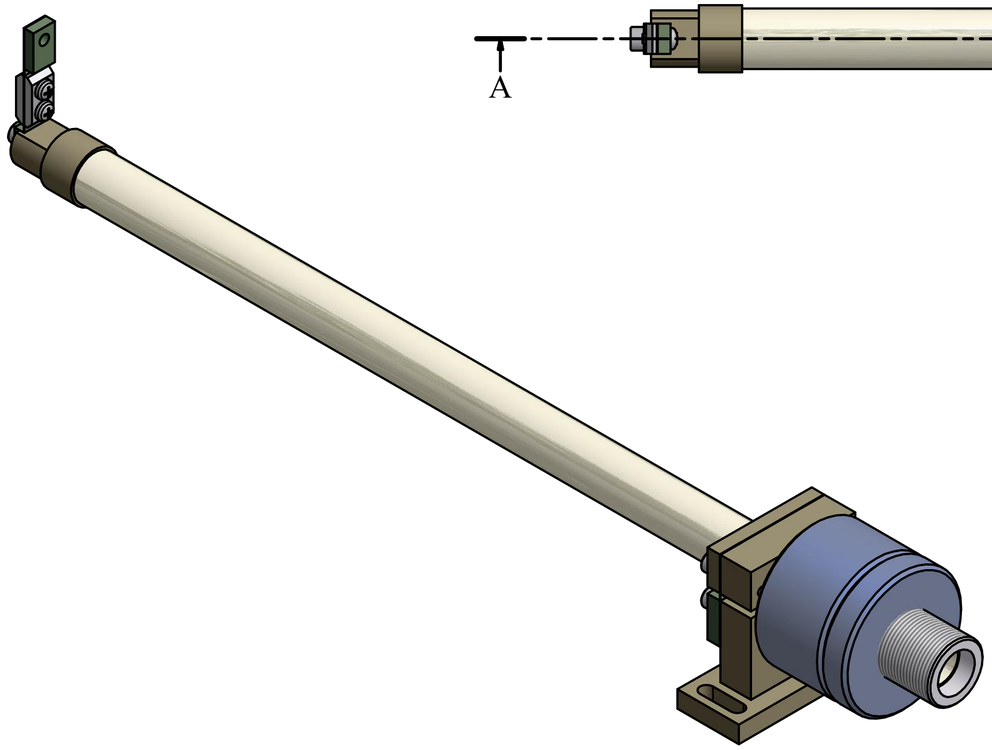

See drawing 0000

ref.	note	date
	modifications	

33	0015	Wand top flexure clamp
32	0015	Wand bottom flexure
31	0015	Wand flexure
30	0015	Wand counterweight lock nut
29	0015	Wand counterweight
28	0016	Wand counterweight thread
27	0016	Wand flexure clamp
26	0015	Wand tip flexure
25	0016	Wand flexure stiffener 2
24	0016	Wand flexure stiffener 1
23	0016	Wand tip clamp
22	0016	Wand tip
21	0016	Wand
20	0015	Wand clamp
19	0015	Wand base
ref.	draw.	legend

Elenco parti

ELEMENTO	QTÀ	NUMERO PARTE	DESCRIZIONE
1	6	ISO 4762 - M3 x 12	Viti con esagono incassato - Grado prodotto A
15	2	ISO 7045 - M2,5 x 6 - 4.8 - H	Vite a testa bombata con impronta a croce di tipo H - Grado prodotto A

PROMEC
di Gennaro Gianni
Bientina (Pisa)-Italia

TITLE
LCGT-SAS
FILTER STANDARD-Gr.1
ASSEMBLING BALANCE

DESIGNED FOR: R. De Salvo
DESIGN: G. Gennaro
DATE: 1-12-2010
SCALE: 1:2
ASS. NUMBER: Filter st.0002-00
REPLACE DRAW.N°:
A2

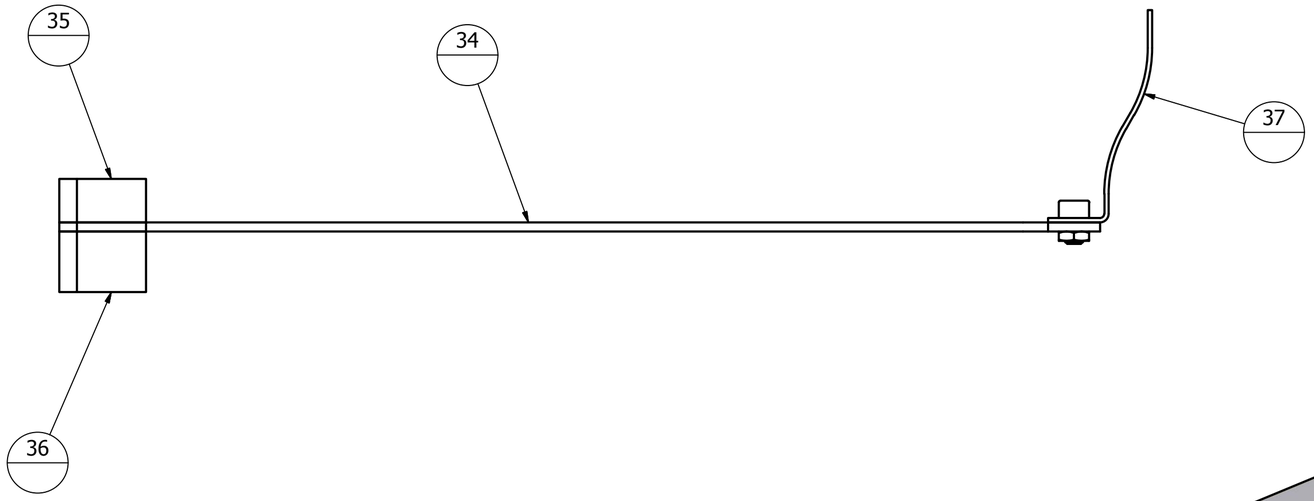

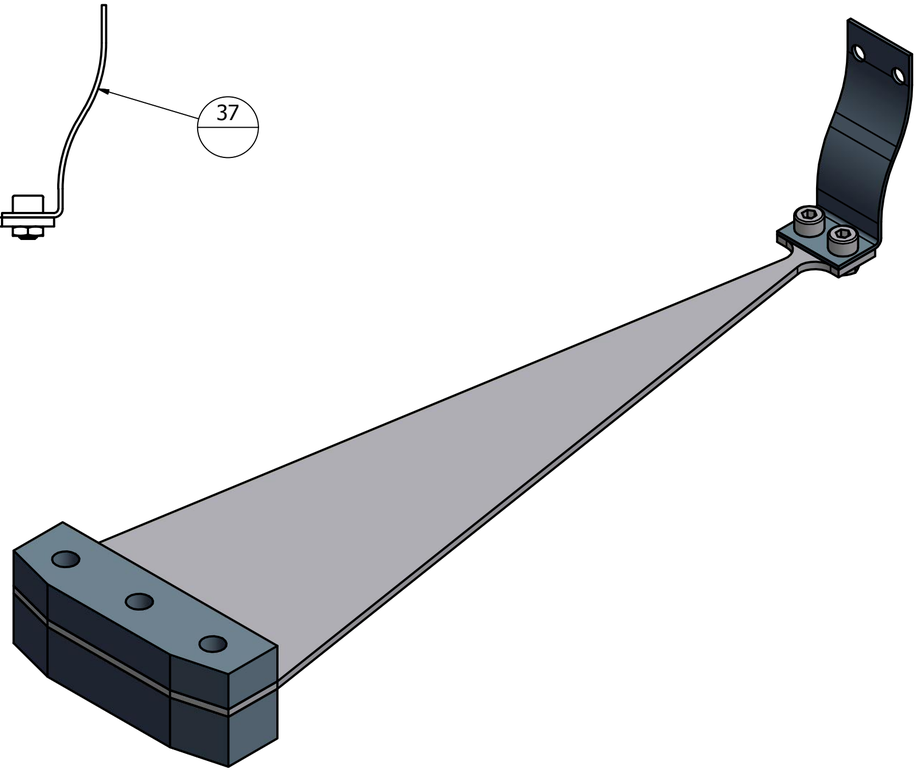

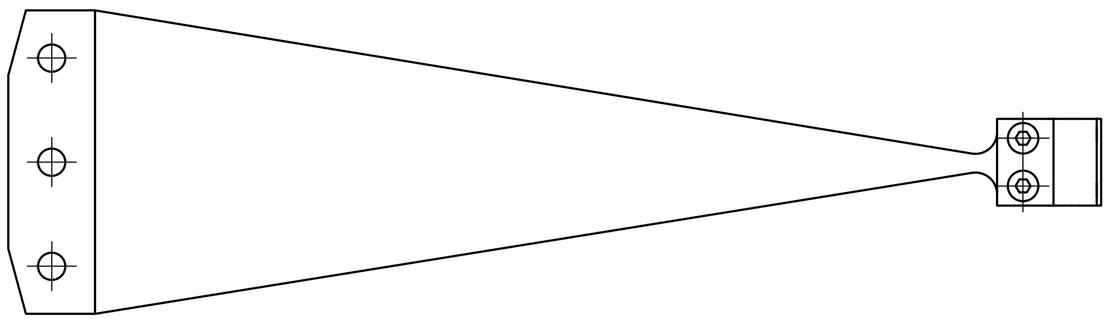

See drawing 0000

ref.	note	date
	modifications	

ref.	draw.	legend
37	0014	Compensator blade flexure
36	0014	Compensator blade clamp 2
35	0014	Compensator blade clamp 1
34	0014	Compensator bymetal blade

Elenco parti

ELEMENTO	QTÀ	NUMERO PARTE	DESCRIZIONE
1	2	ISO 4035 - M4	Dado esagonale
6	2	ISO 4762 - M4 x 6	Viti con esagono incassato - Grado prodotto A

PROMEC
di Gennaro Gianni
BIENTINA (PISA)-ITALIA

TITLE
LCGT-SAS
FILTER STANDARG-Gr.1
CORRECTION TEMPERATURE

DESIGNED FOR: R. De Salvo
DESIGN: G. Gennaro
DATE: 1-12-2010
SCALE: 1:1
ASS. NUMB: Filter st.0003-00
REPLACE DRAW.N°:
A2

A-A (1 : 2)

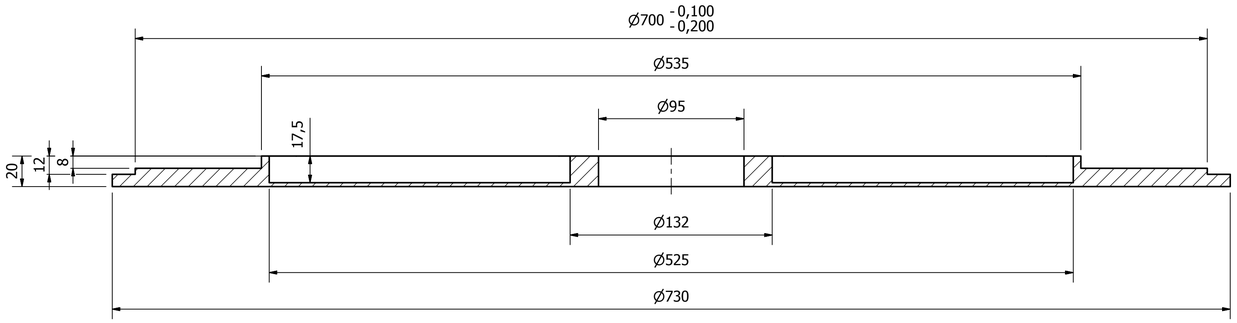

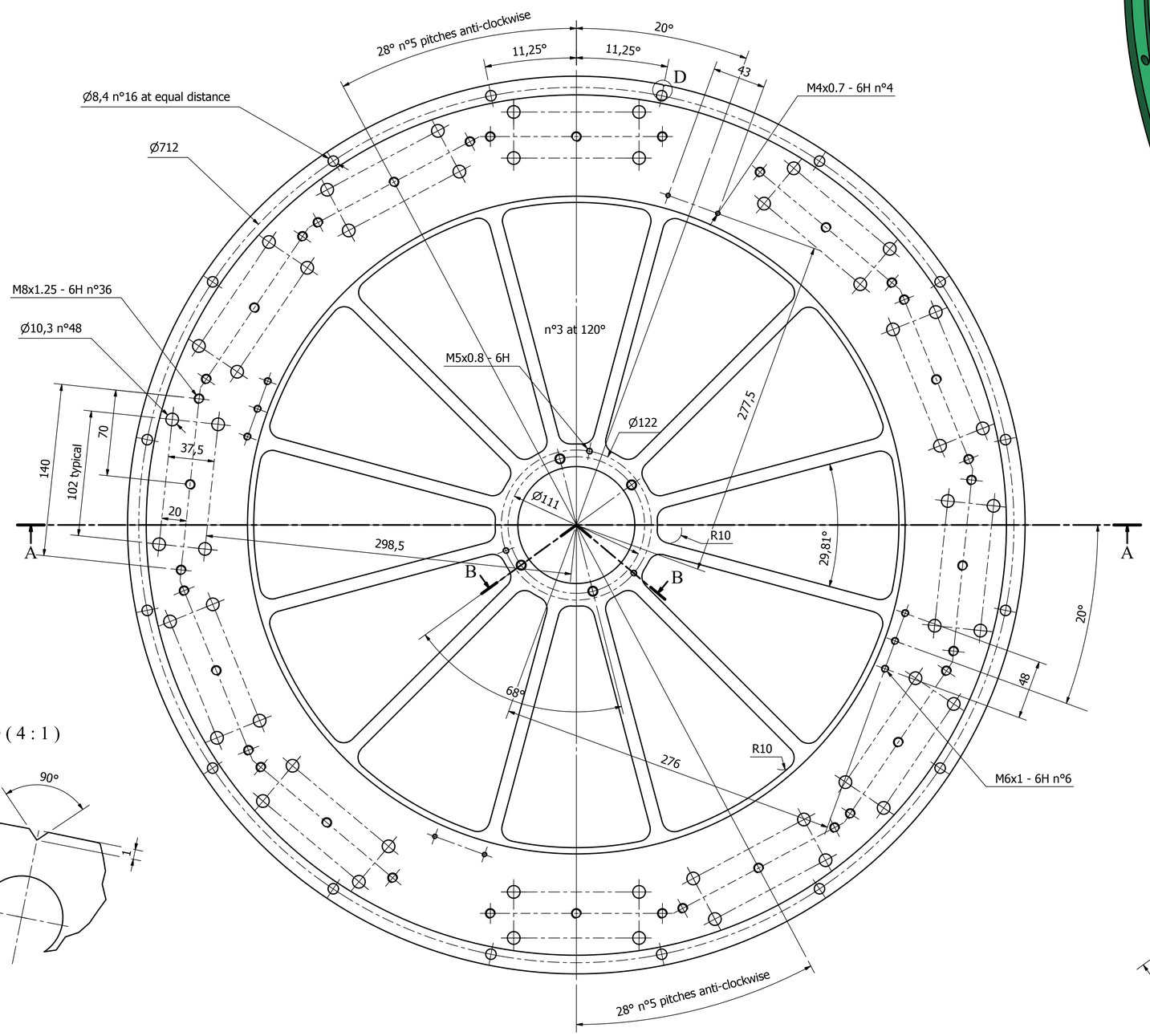

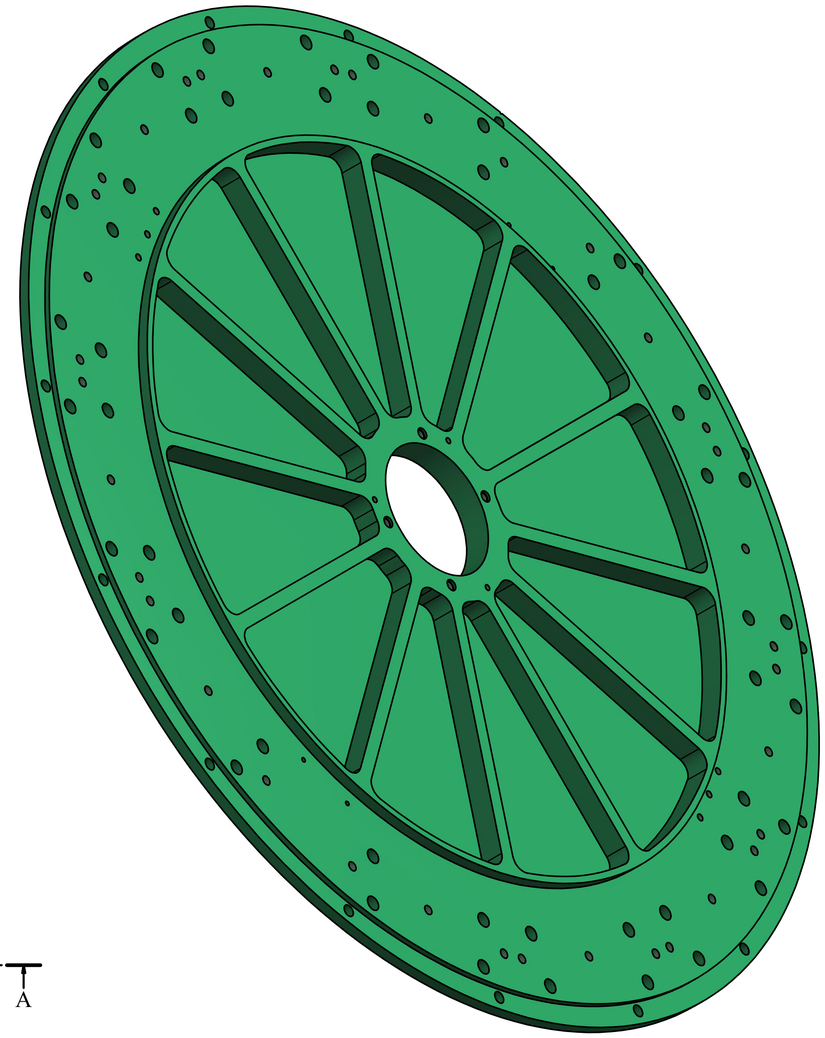

D (4 : 1)

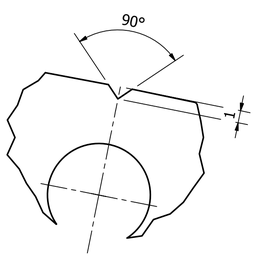

B-B (1 : 2)

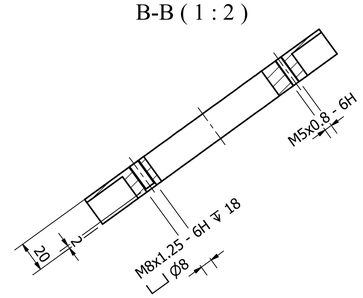

mass 36.553 Kg

ref.	note	date
	modifications	

ref.	pieces	material	scale
1	1	AISI 304	1:2

GENERAL TOLERANCE mK

TOLERANCE SYSTEM: ISO 2768-2 CLASS H-K-L

PROMEC
di Gennaro Gianni
BIENTINA (PISA)-ITALIA

DESIGNED FOR: R. De Salvo
DRAW. BY: G. Gennaro
DATE: 1-12-2010
SCALE: 1:2
N° DRAW: Filter st.0004-00
REPLACE DRAW N°:
DETAIL FROM: 0000
A1

TITLE
LCGT-SAS
FILTER STANDARD-Gr.1
MAIN FILTER PLATFORM

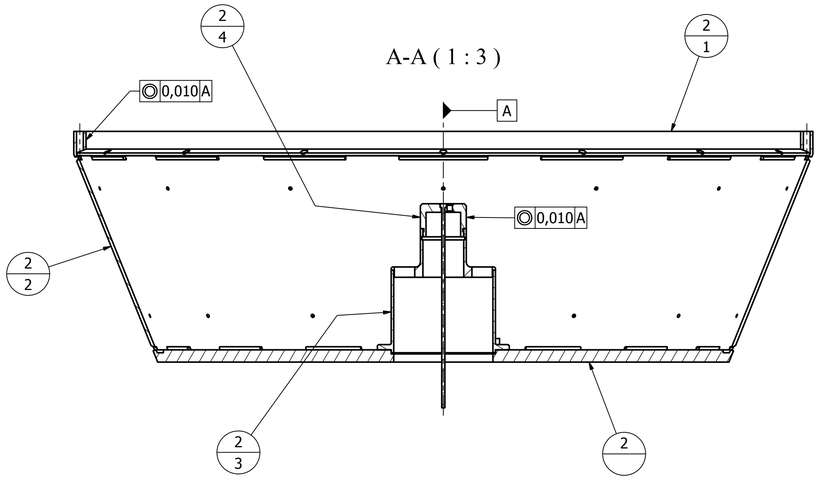

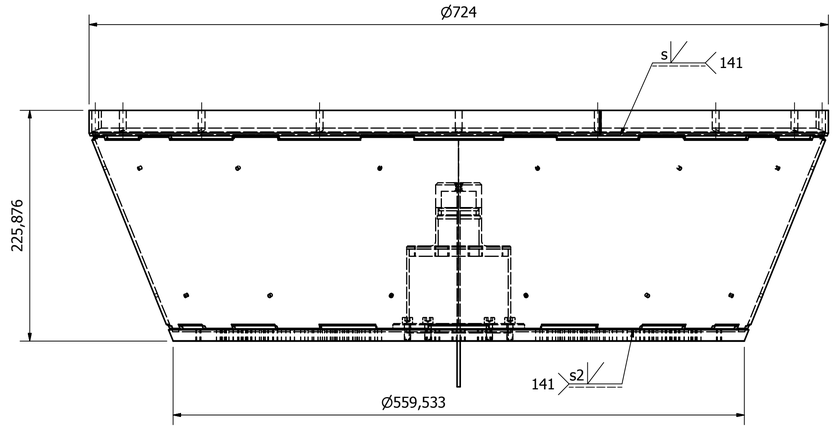

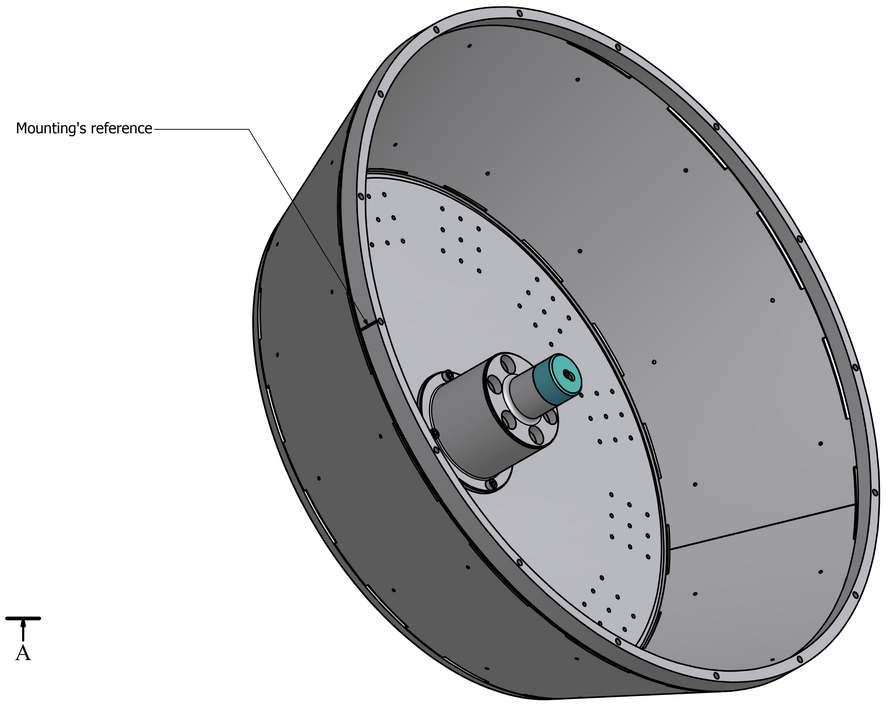

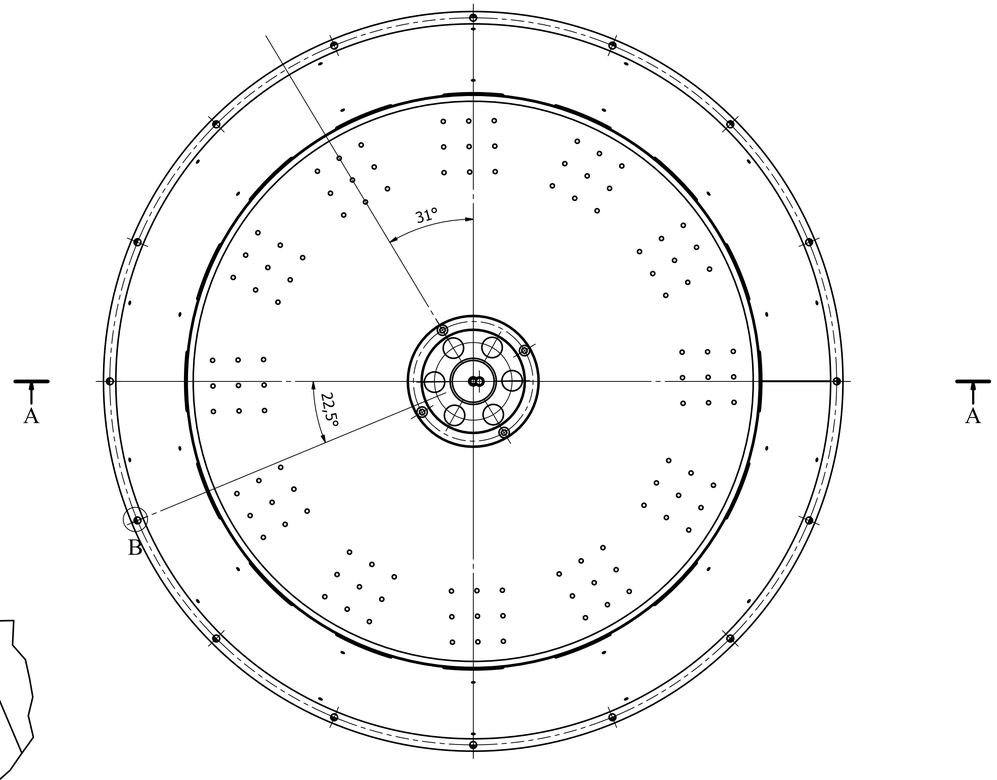

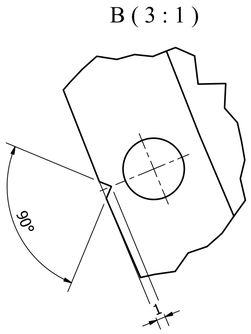

See drawing 0000

ref.	note	date
modifications		
2.4	0008	Upper wire receptacle
2.3	0008	Shelll nose
2.2	0007	Ferrule
2.1	0006	Ring
2	0006	Top plate
ref.	draw.	legend

PROMEC
di Gennaro Gianni
Bientina (Pisa)-Italia

TITLE
LCGT-SAS
FILTER STANDARD-Gr.1
CUP

DESIGNED FOR: R. De Salvo
DESIGN: G. Gennaro
DATE: 2-12-2010
SCALE: 1:3
ASS. NUMB.: Filter st.0005-00
REPLACE DRAW.N°:
A1

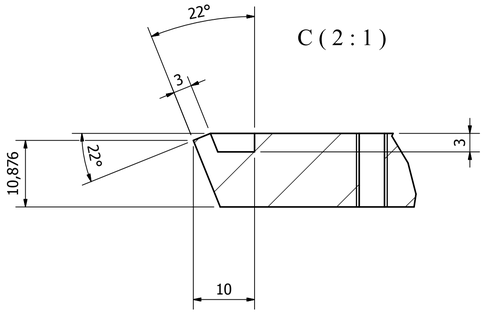

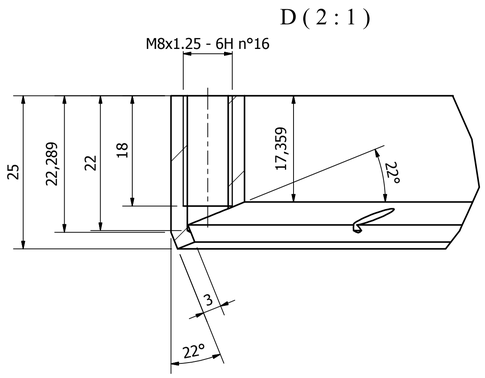

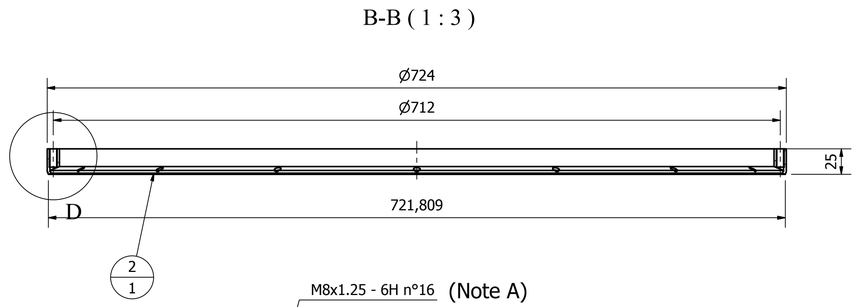

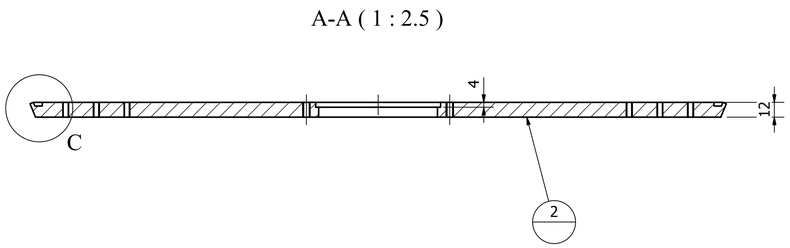

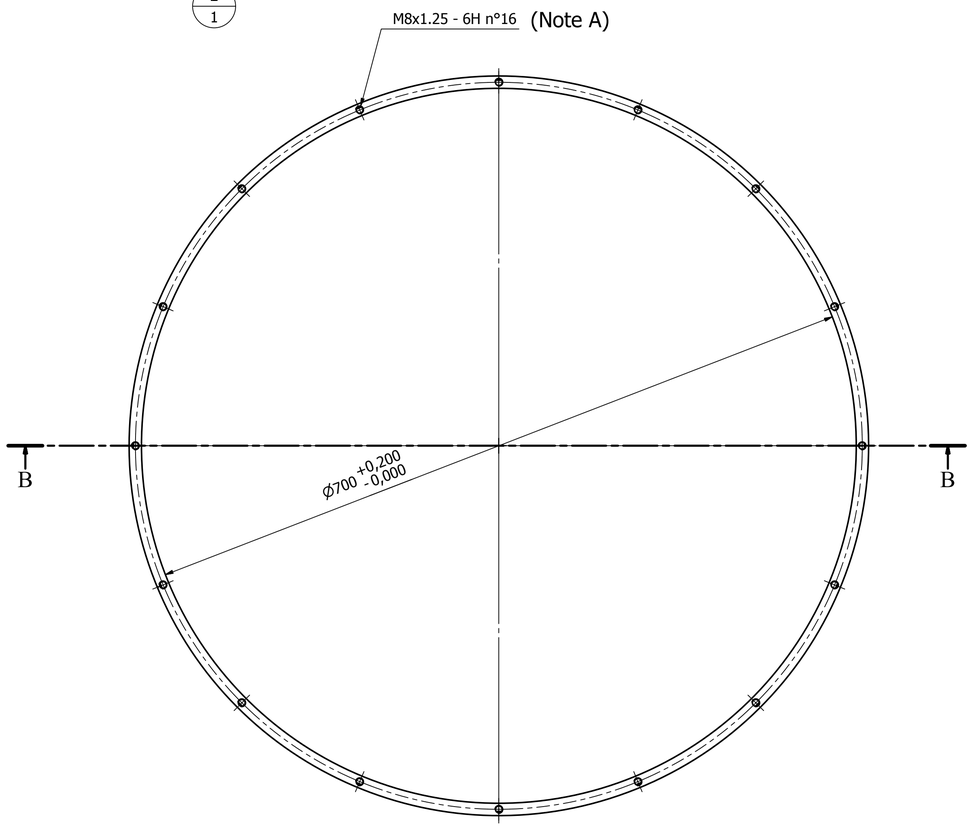

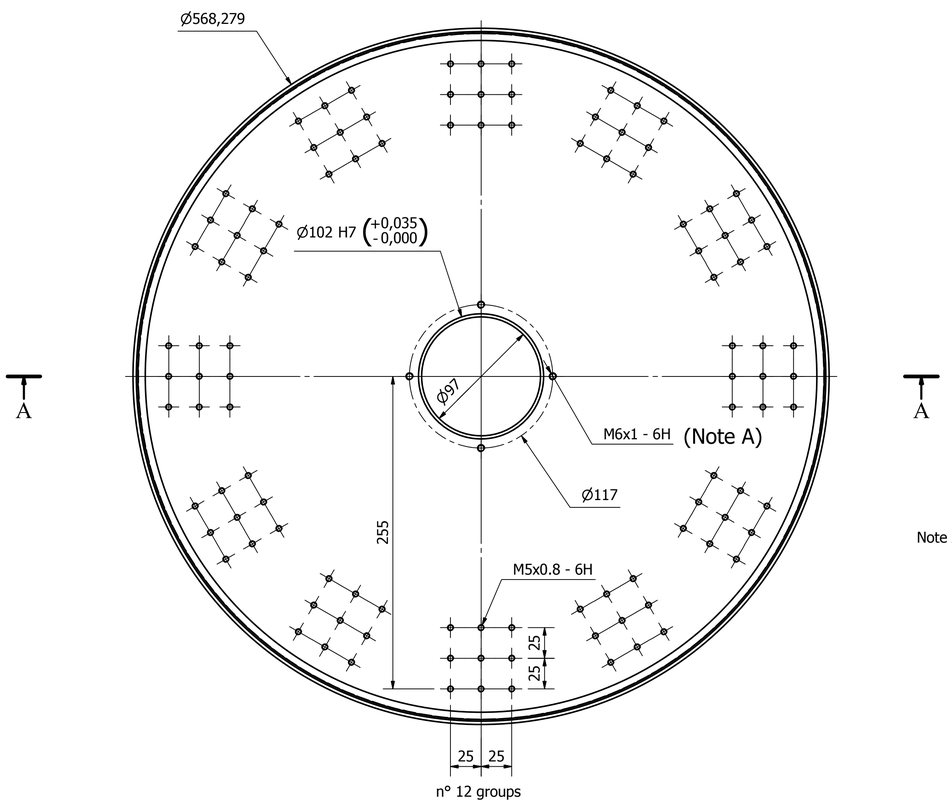

Note A: Drill all holes after welding in according with dimension in the drawing 0005

All dimensions are finals without swarf

ref.	note	date
modifications		

ref.	pieces	material	scale
2.1	1	AISI 304 L	1:3
2	1	AISI 304 L	1:3

GENERAL TOLERANCE mK

TOLERANCE SYSTEM: ISO 2768-2 CLASS H-K-L

PROMEC
di Gennaro Gianni
BIENTINA (PISA)-ITALIA

DESIGNED FOR: R. De Salvo
DRAW. BY: G. Gennaro
DATE: 2-12-2010
SCALE: 1:3
N° DRAW: Filter st.0006-00
REPLACE DRAW N°:
DETAIL FROM: 0005
A1

TITLE
LCGT-SAS
FILTER STANDARD-Gr.1
DETAILS CUP

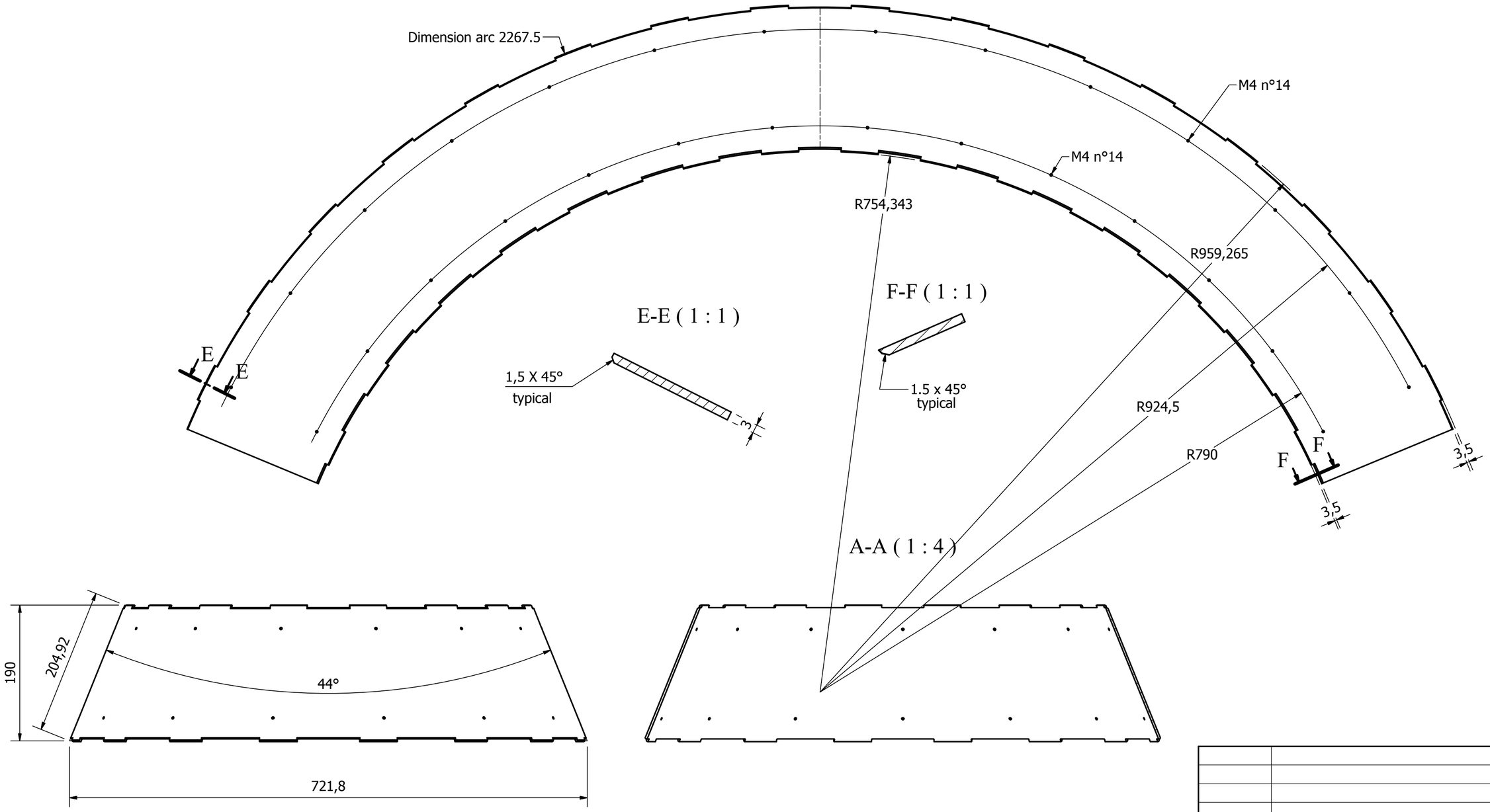

ref.	note	date
	modifications	

ref.	pieces	material	scale
2.2	1	AISI 304 L	1:4

GENERAL TOLERANCE mL

TOLERANCE SYSTEM: ISO 2768-2 CLASS H-K-L

PROMEC
di Gennaro Gianni
BIENTINA (PISA)-ITALIA

DESIGNED FOR R. De Salvo
DRAW. BY G. Gennaro
DATE 2-12-2010 SCALE 1:1
N° DRAW Filter st.0007-00
REPLACE DRAW N°
DETAIL FROM 0005 A2

TITLE
LCGT-SAS
FILTER STANDARD-Gr.1
FERRULE

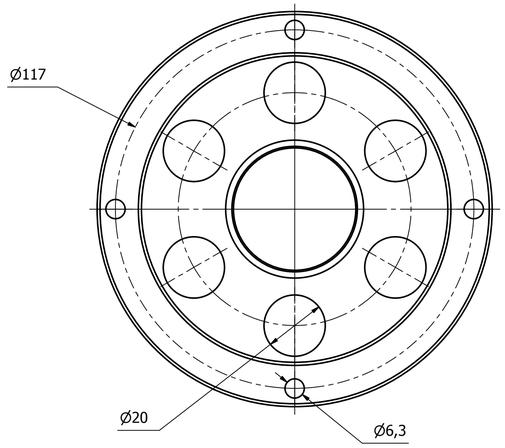

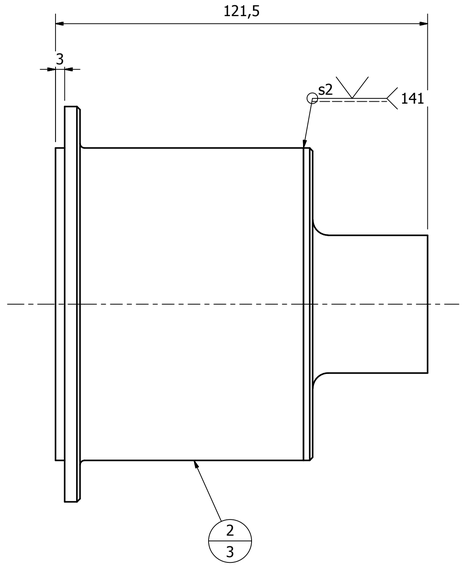

A-A (1 : 1)

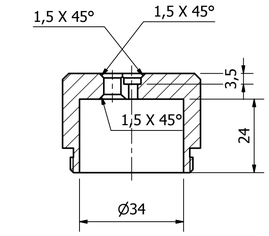

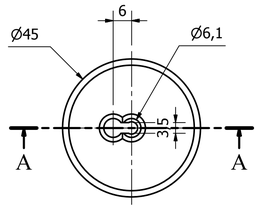

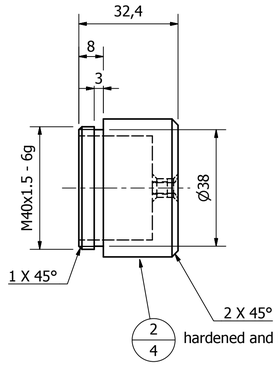

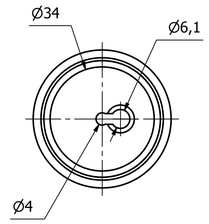

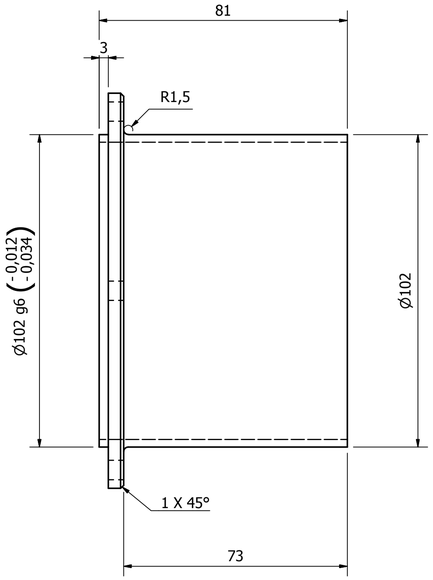

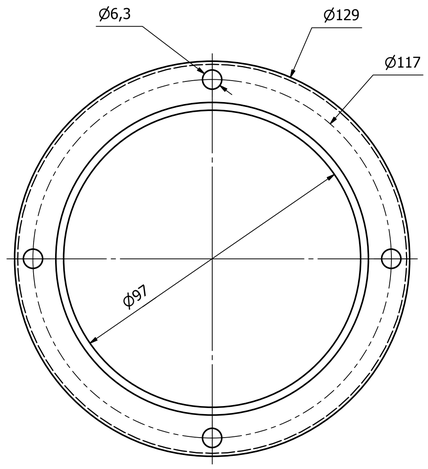

C-C (1 : 1)

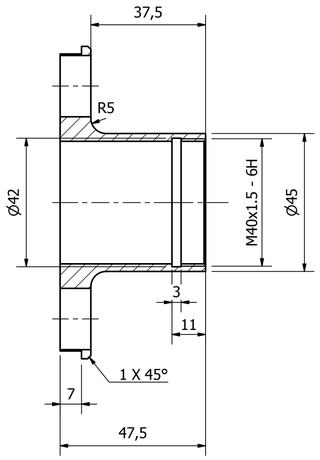

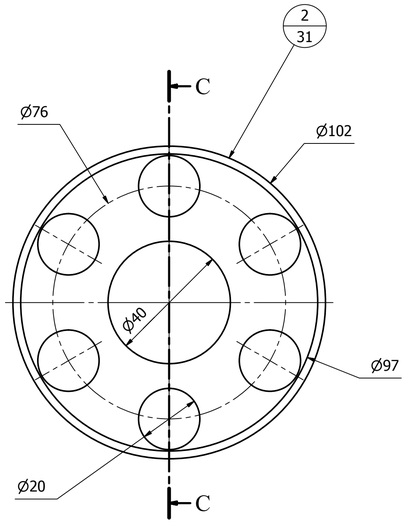

ref.	note	date
	modifications	

ref.	pieces	material	scale
2.4	1	C40 hardenet light nickel plated	1:1
2.32	1	AISI 304 L	1:1
2.31	1	AISI 304 L	1:1

GENERAL TOLERANCE mK

TOLERANCE SYSTEM: ISO 2768-2 CLASS H-K-L

PROMEC
di Gennaro Gianni
BIENTINA (PISA)-ITALIA

DESIGNED FOR: R. De Salvo
DRAW. BY: G. Gennaro
DATE: 3-12-2010
SCALE: 1:1
N° DRAW: Filter st.0008-00
REPLACE DRAW N°:
DETAIL FROM: 0005
A1

TITLE
LCGT-SAS
FILTER STANDARD-Gr.1
DETAILS CUP

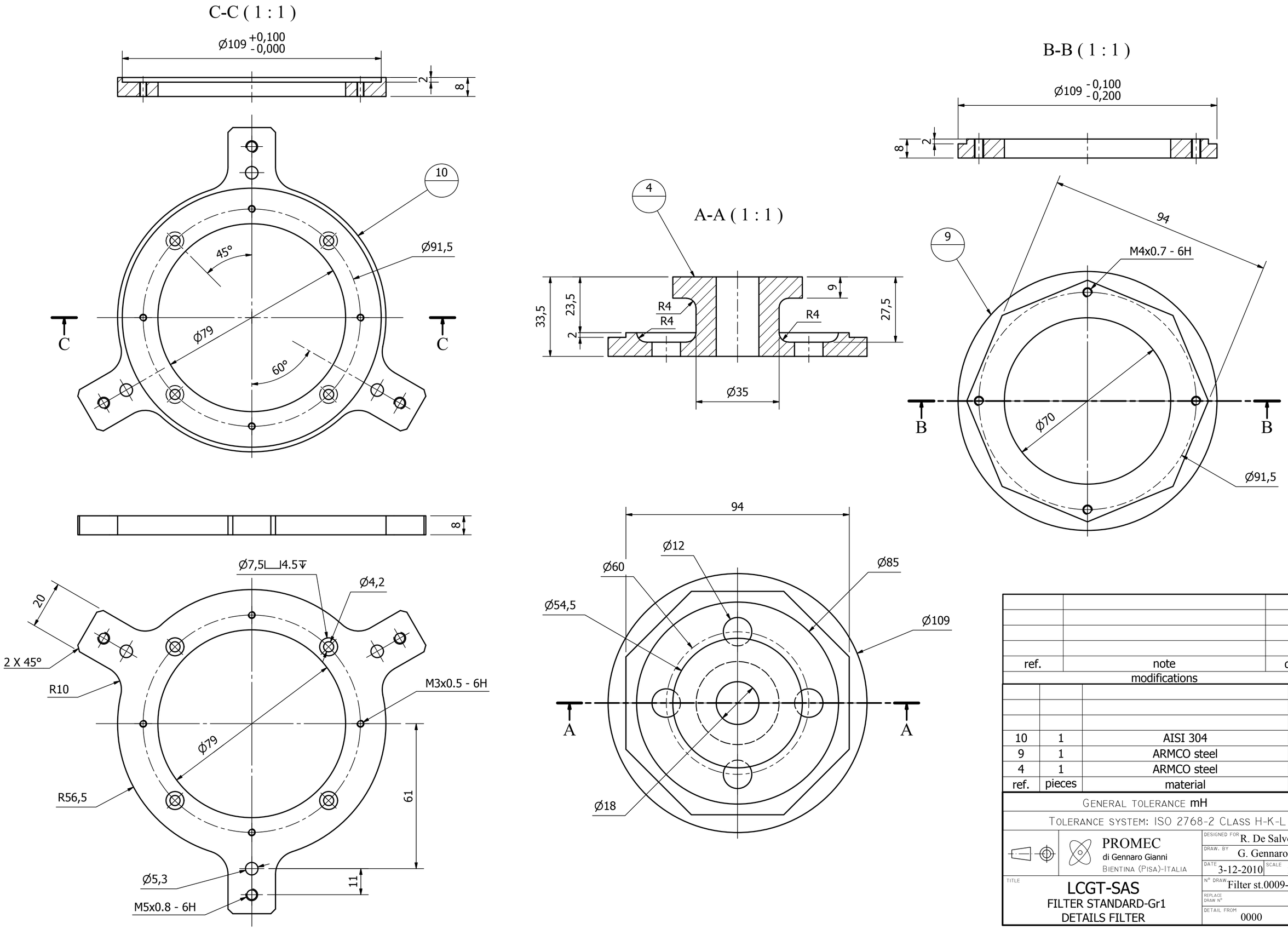

ref.	note	date
	modifications	

ref.	pieces	material	scale
10	1	AISI 304	1:1
9	1	ARMCO steel	1:1
4	1	ARMCO steel	1:1

GENERAL TOLERANCE mH

TOLERANCE SYSTEM: ISO 2768-2 CLASS H-K-L

PROMEC
di Gennaro Gianni
BIENTINA (PISA)-ITALIA

DESIGNED FOR: R. De Salvo
DRAW. BY: G. Gennaro
DATE: 3-12-2010
SCALE: 1:1
N° DRAW.: Filter st.0009-00
REPLACE DRAW N°:
DETAIL FROM: 0000
A2

TITLE
LCGT-SAS
FILTER STANDARD-Gr1
DETAILS FILTER

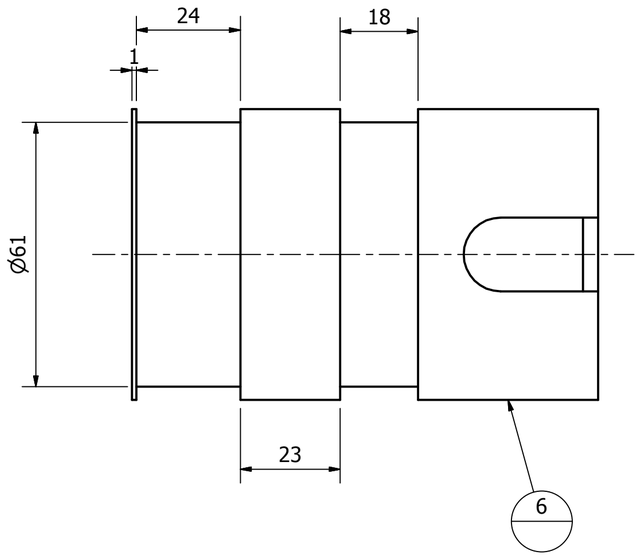

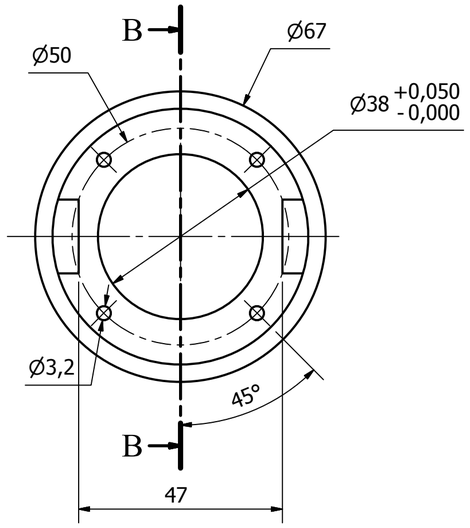

B-B (1 : 1)

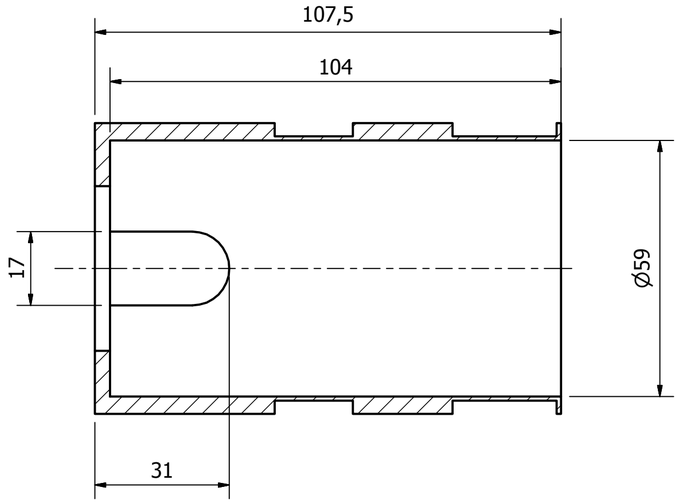

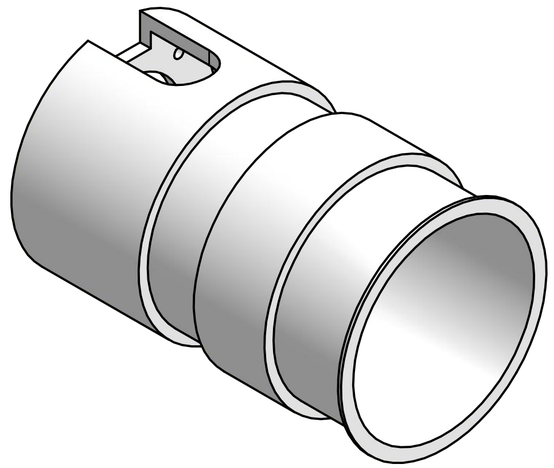

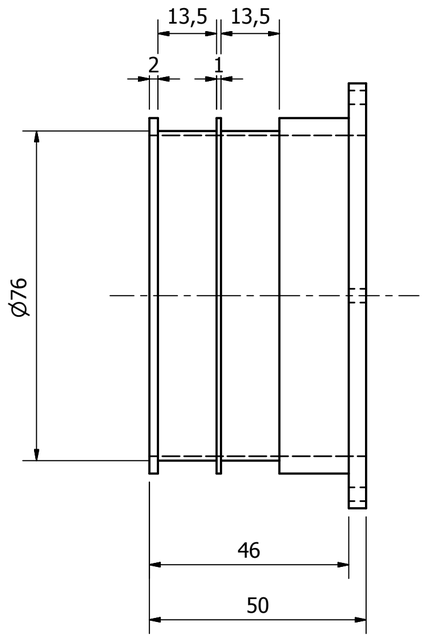

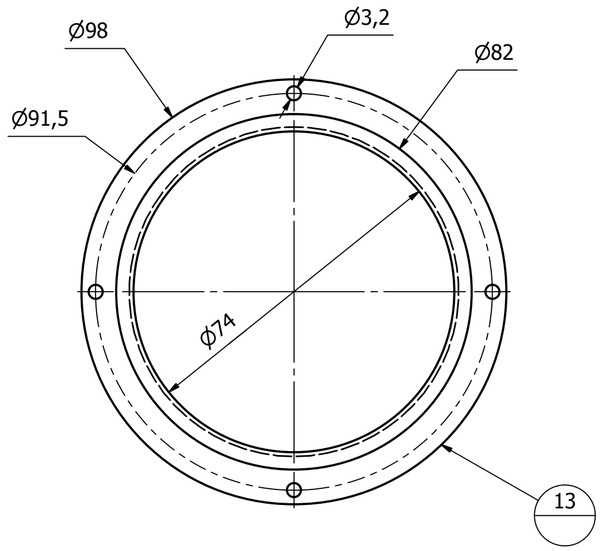

ref.		note	date
modifications			
13	1	Peek 1000	1:1
6	1	Peek 1000	1:1
ref.	pieces	material	scale

GENERAL TOLERANCE mH

TOLERANCE SYSTEM: ISO 2768-2 CLASS H-K-L

PROMEC
di Gennaro Gianni
BIENTINA (PISA)-ITALIA

DESIGNED FOR R. De Salvo
DRAW. BY G. Gennaro
DATE 3-12-2010
SCALE 1:1
N° DRAW. Filter st.0010-00
REPLACE DRAW N°
DETAIL FROM 0000
A2

TITLE
LCGT-SAS
FILTER STANDARD-Gr.1
COILS

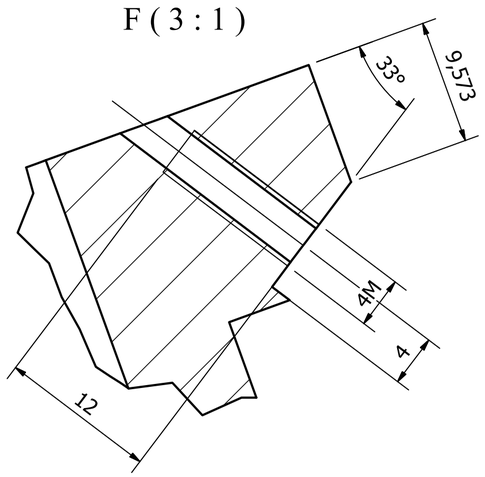

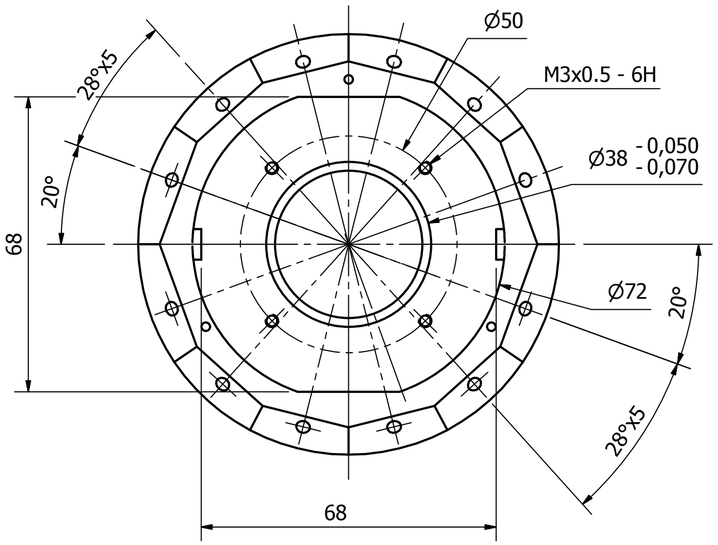

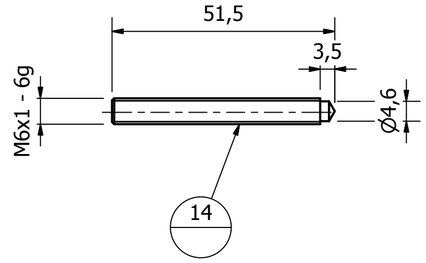

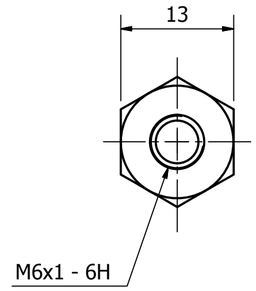

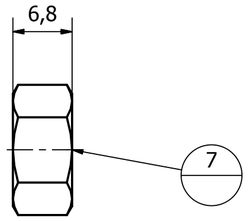

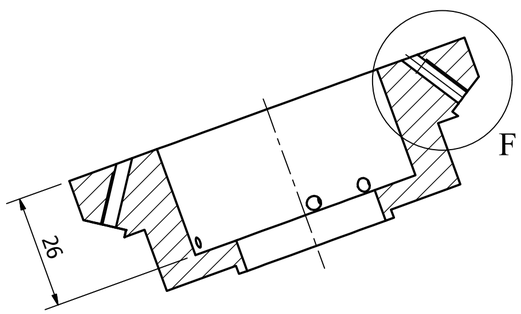

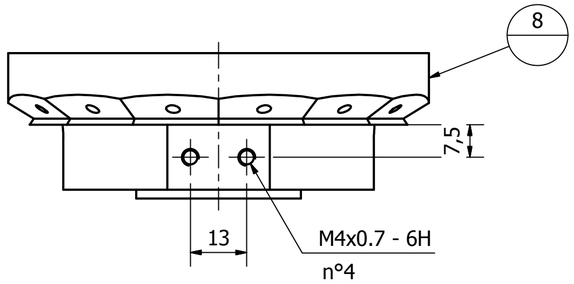

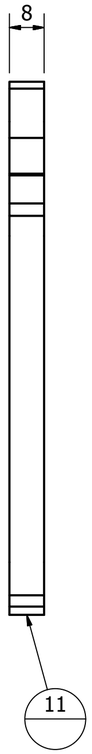

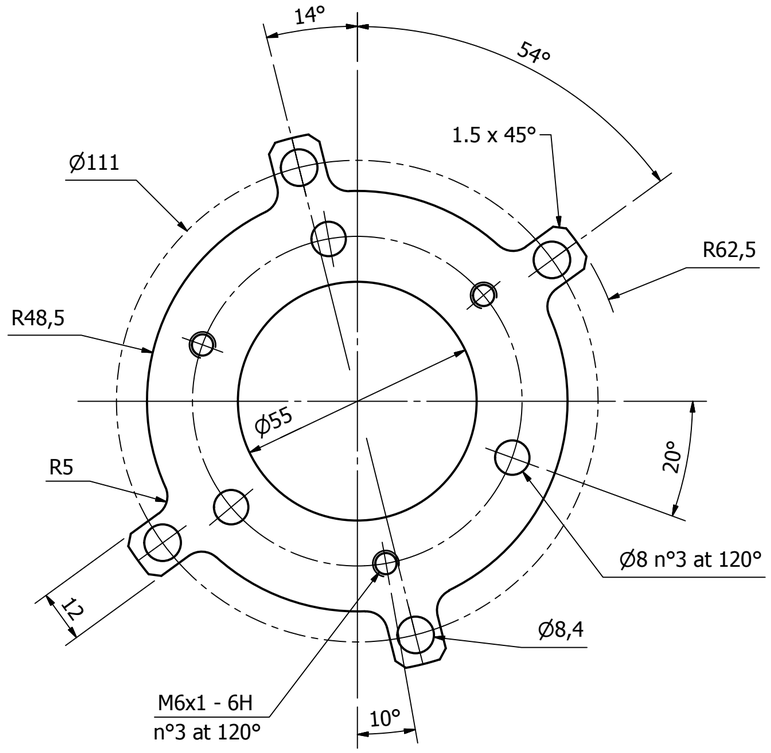

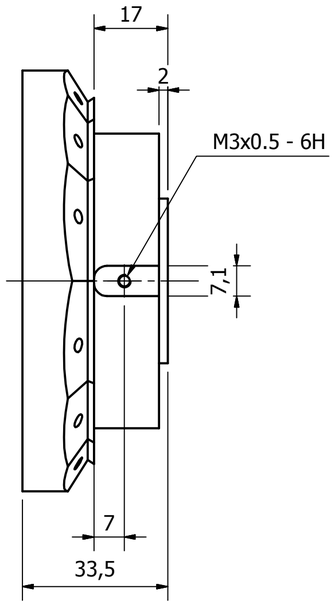

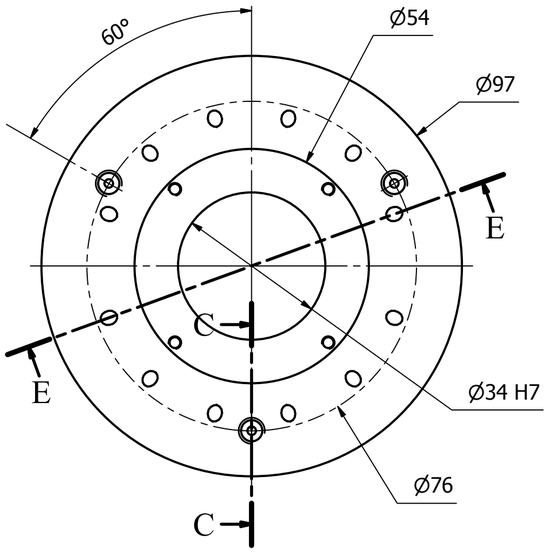

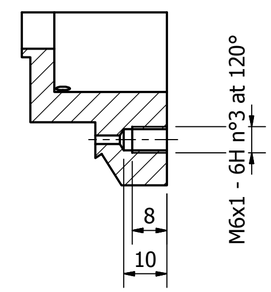

ref.		note	date

modifications

ref.	pieces	material	scale
14	2	AISI 316	1:1
11	1	AISI 304	
8	1	AISI 304	1:1
7	2	AISI 316	2:1

GENERAL TOLERANCE mH

TOLERANCE SYSTEM: ISO 2768-2 CLASS H-K-L

PROMEC
di Gennaro Gianni
BIENTINA (PISA)-ITALIA

DESIGNED FOR R. De Salvo
DRAW. BY G. Gennaro
DATE 3-12-2010
SCALE 1:1
N° DRAW Filter st.0011-00
REPLACE DRAW N°
DETAIL FROM 0000
A2

TITLE
LCGT-SAS
FILTER STANDARD-Gr1
DETAILS FILTER

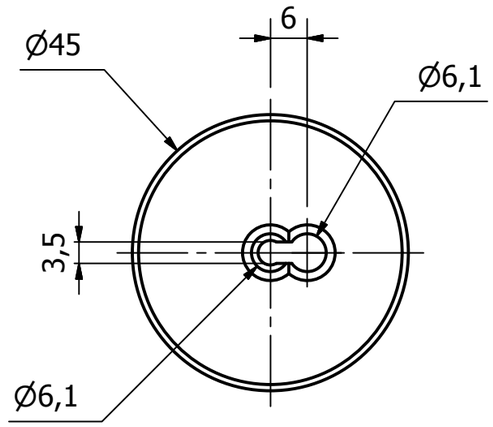

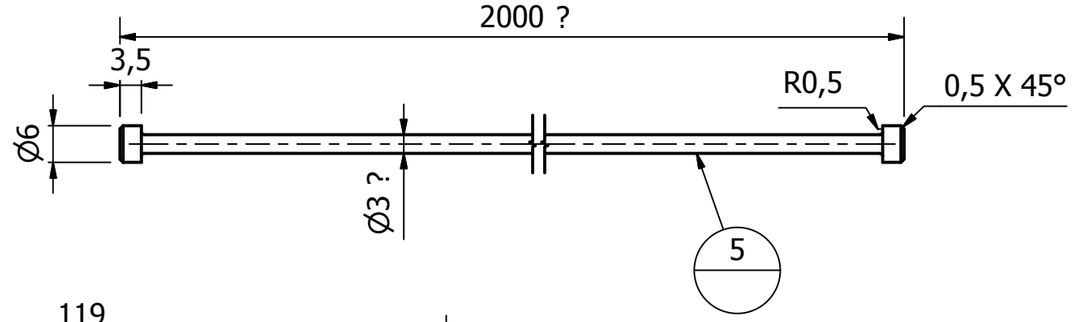

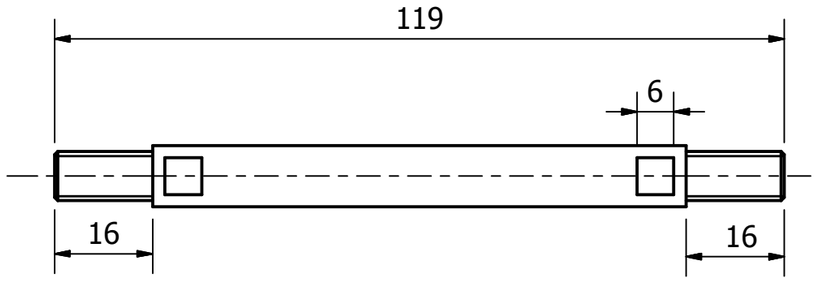

A-A (1 : 1)

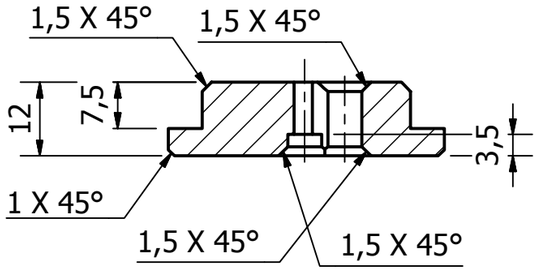

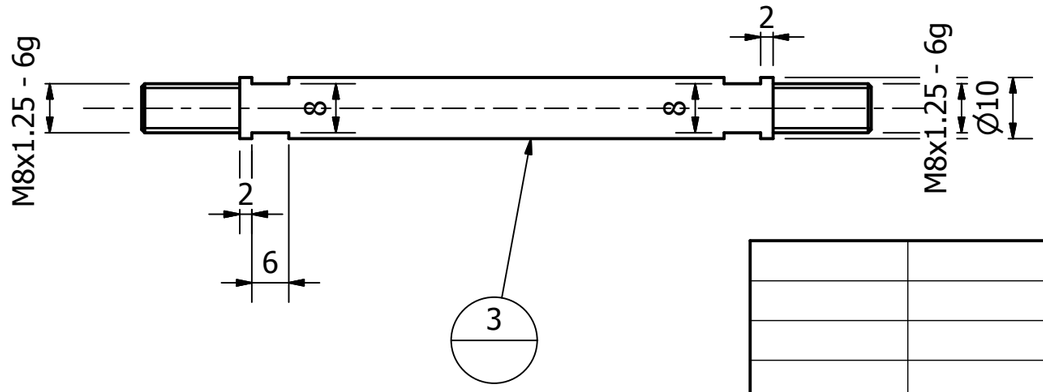

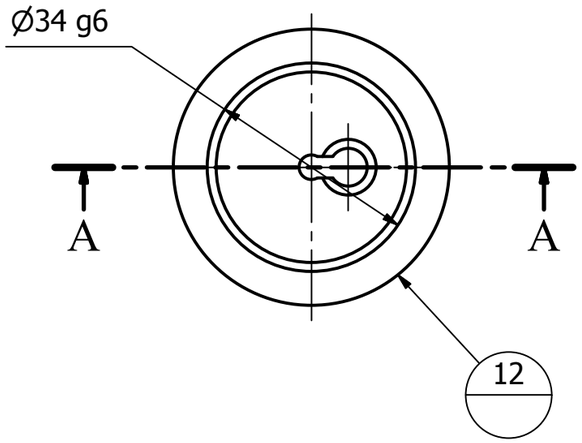

ref.		note	date
modifications			
12	1	C40 hardened light nickel plated	1:1
5	1	maraging	1:1
3	4	AISI 304	1:1
ref.	pieces	material	scale

GENERAL TOLERANCE mH

TOLERANCE SYSTEM: ISO 2768-2 CLASS H-K-L

PROMEC
di Gennaro Gianni
BIENTINA (PISA)-ITALIA

DESIGNED FOR R. De Salvo
DRAW. BY G. Gennaro
DATE 3-12-2010 SCALE 1:1
N° DRAW Filter st.0012-00
REPLACE DRAW N°
DETAIL FROM 0000 A3

TITLE
LCGT-SAS
FILTER STANDARD-Gr.1
DETAILS FILTER

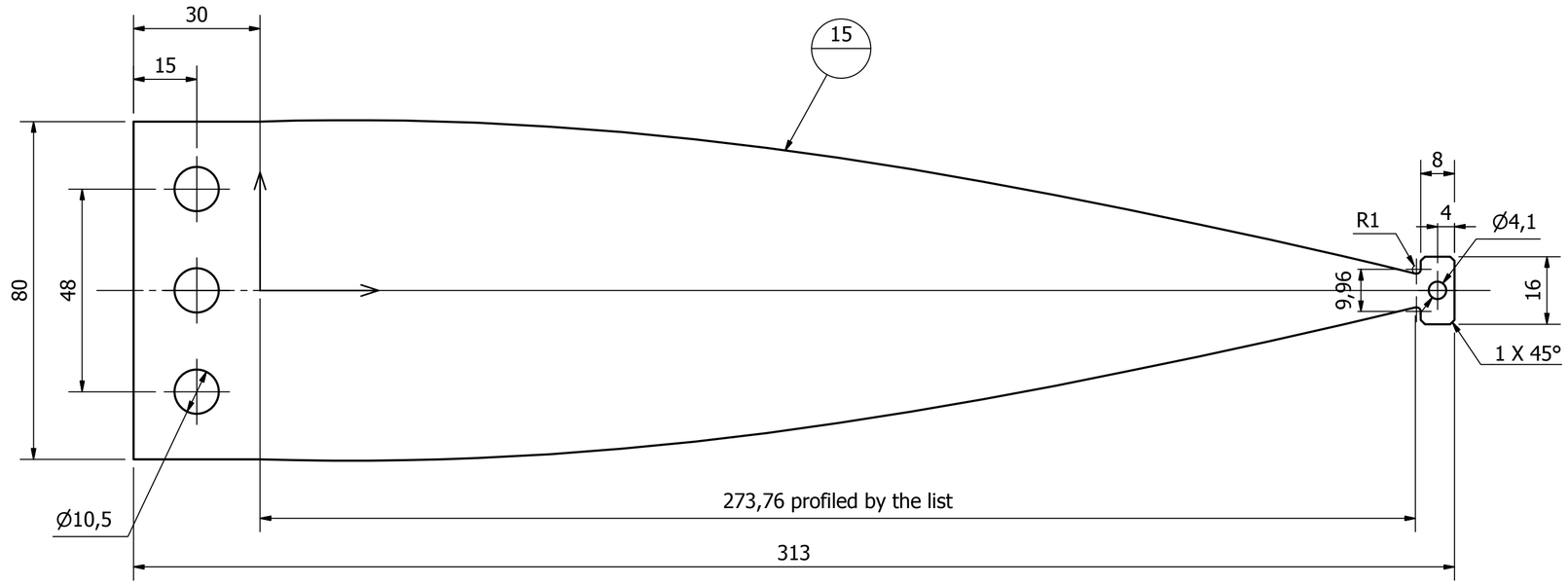

PROFILE BLADES

	Type A	Type B	Type C
X	Y	Y	Y
0.00	40.00	40.00	40.00

not ready do not produce blades

A-A (1 : 1)

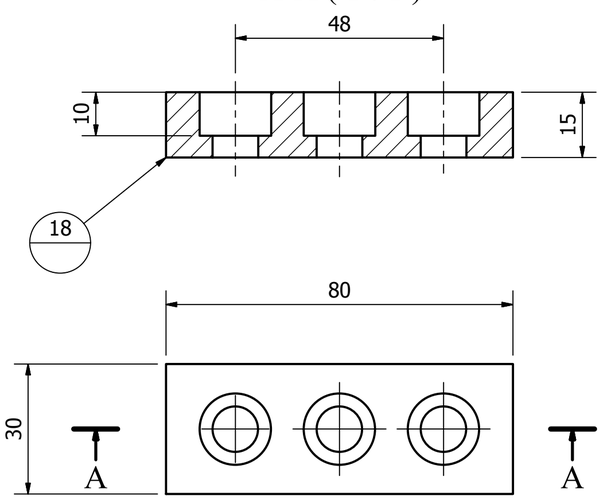

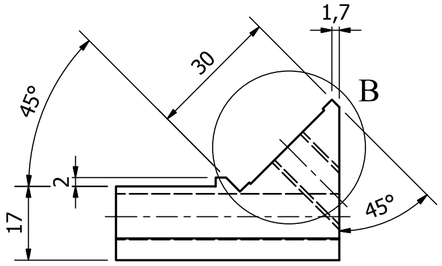

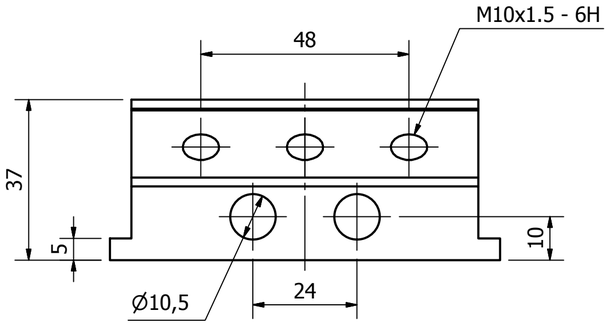

B (2 : 1)

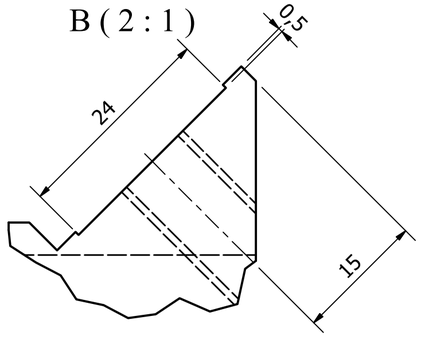

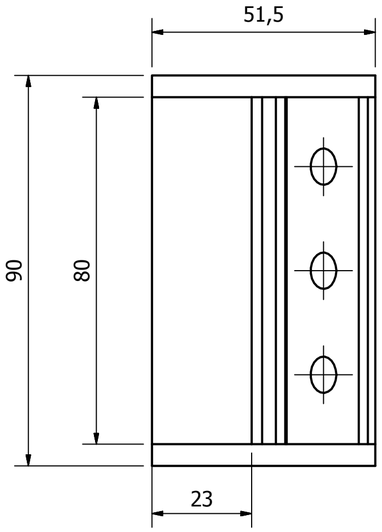

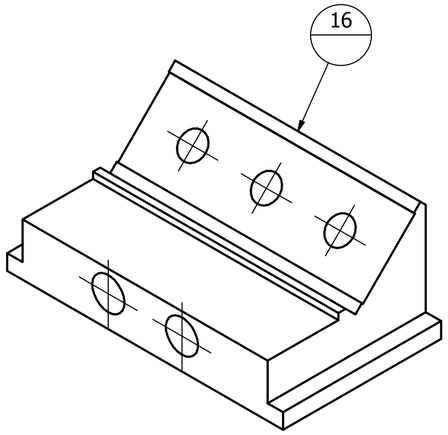

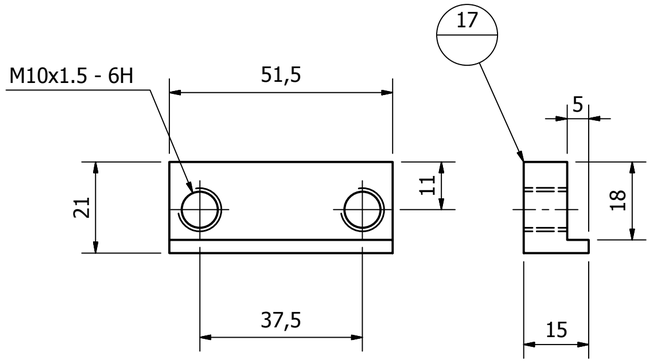

ref.		note	date
		modifications	
18	X	AISI 304	1:1
17	X	AISI 304	1:1
16	X	AISI 304	1:1
15	X	maraging	1:1
ref.	pieces	material	scale

GENERAL TOLERANCE mH

TOLERANCE SYSTEM: ISO 2768-2 CLASS H-K-L

PROMEC
di Gennaro Gianni
BIENTINA (PISA)-ITALIA

DESIGNED FOR R. De Salvo
DRAW. BY G.Gennaro
DATE 5-12-2010 SCALE 1:1
N° DRAW Filter st.0013-00
REPLACE DRAW N°
DETAIL FROM 0001 A2

TITLE
LCGT-SAS
FILTER STANDARD-Gr.1
BLADE AND SUPPORT

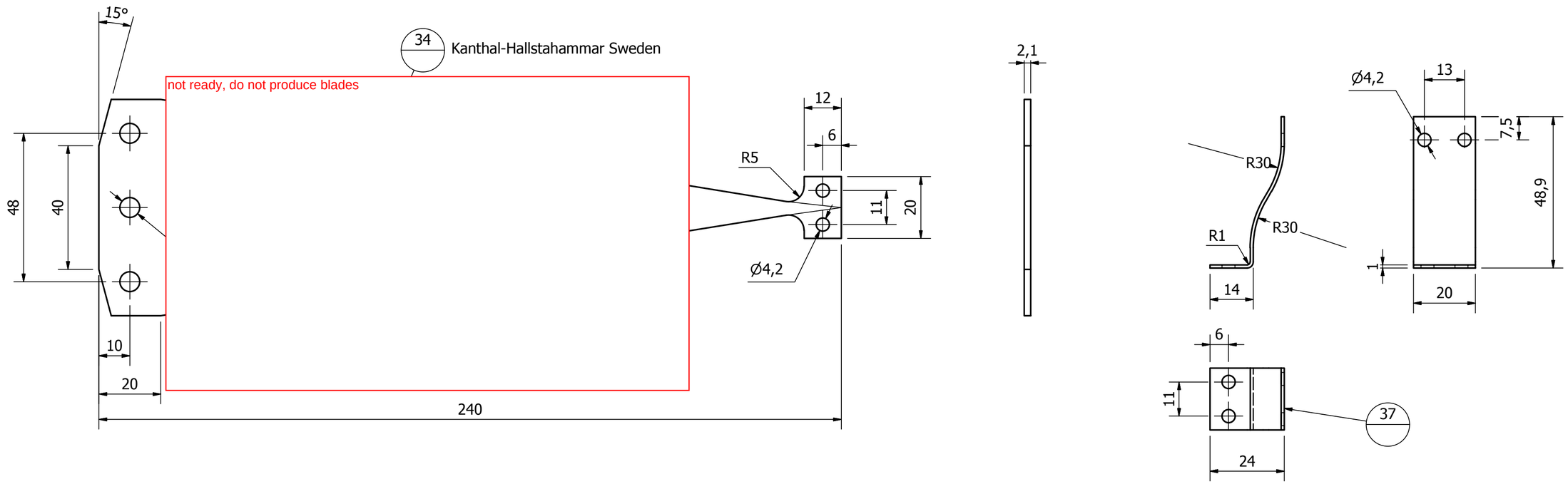

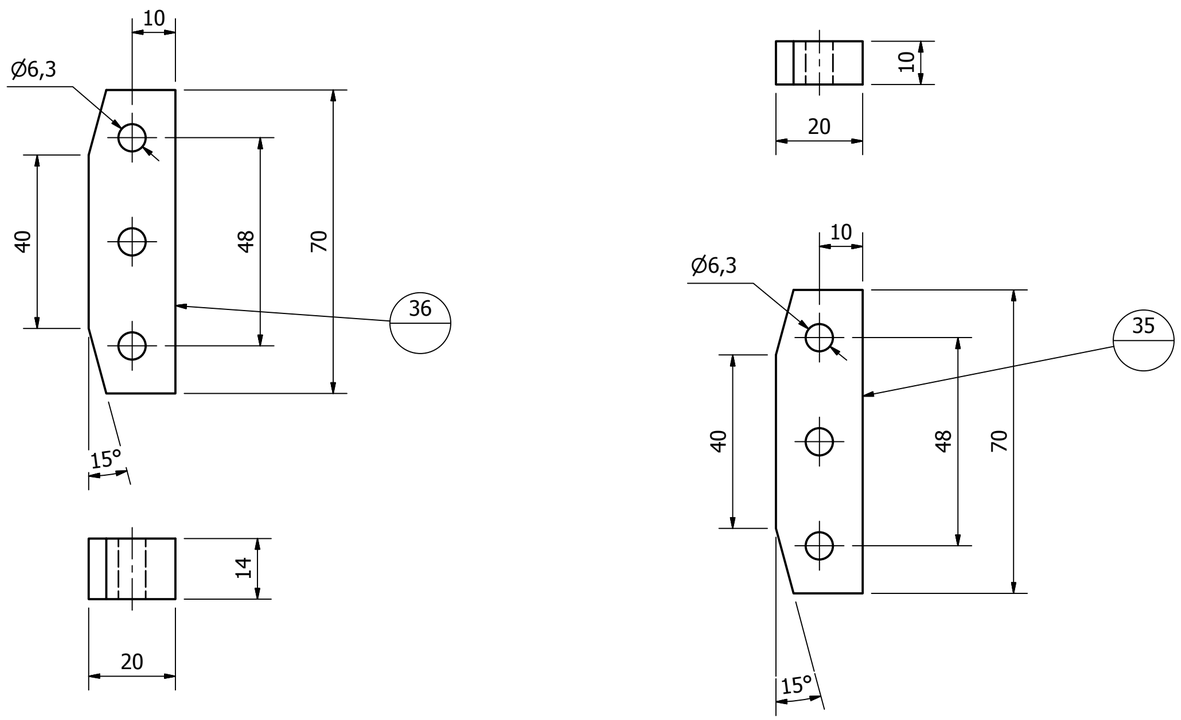

ref.	note	date
	modifications	

ref.	pieces	material	scale
37	2	AISI 304	1:1
36	2	AISI 304	1:1
35	2	AISI 304	1:1
34	2	Kanthal 230	1:1

GENERAL TOLERANCE mH

TOLERANCE SYSTEM: ISO 2768-2 CLASS H-K-L

PROMEC
di Gennaro Gianni
BIENTINA (PISA)-ITALIA

DESIGNED FOR R. De Salvo
DRAW. BY G. Gennaro
DATE 6-12-2010
SCALE 1:1
N° DRAW Filter st.0014-00
REPLACE DRAW N°
DETAIL FROM 0003
A2

TITLE
LCGT-SAS
FILTER STANDARD-Gr1
DETAILS TEMPERATURE BLADE

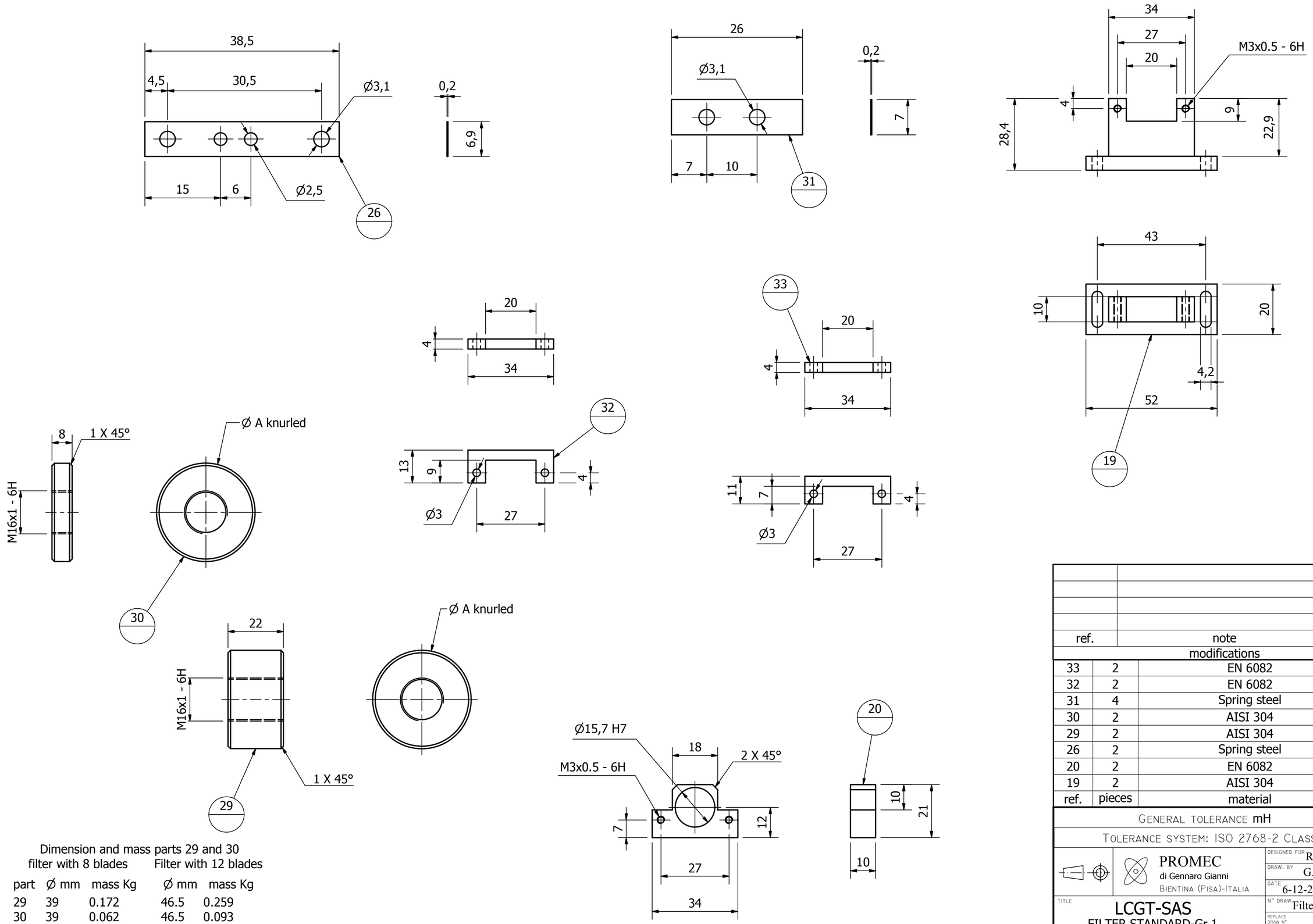

Dimension and mass parts 29 and 30

	filter with 8 blades		Filter with 12 blades	
part	Ø mm	mass Kg	Ø mm	mass Kg
29	39	0.172	46.5	0.259
30	39	0.062	46.5	0.093

ref.	note	date
	modifications	

ref.	pieces	material	scale
33	2	EN 6082	1:1
32	2	EN 6082	1:1
31	4	Spring steel	2:1
30	2	AISI 304	1:1
29	2	AISI 304	1:1
26	2	Spring steel	2:1
20	2	EN 6082	1:1
19	2	AISI 304	1:1

GENERAL TOLERANCE mH

TOLERANCE SYSTEM: ISO 2768-2 CLASS H-K-L

PROMEC
di Gennaro Gianni
BIENTINA (PISA)-ITALIA

DESIGNED FOR R. De Salvo
DRAW. BY G. Gennaro
DATE 6-12-2010 SCALE 1:1
N° DRAW. Filter st.0015-00
REPLACE DRAW N°
DETAIL FROM 0002 A2

TITLE
LCGT-SAS
FILTER STANDARD-Gr.1
DETAILS BALANCE

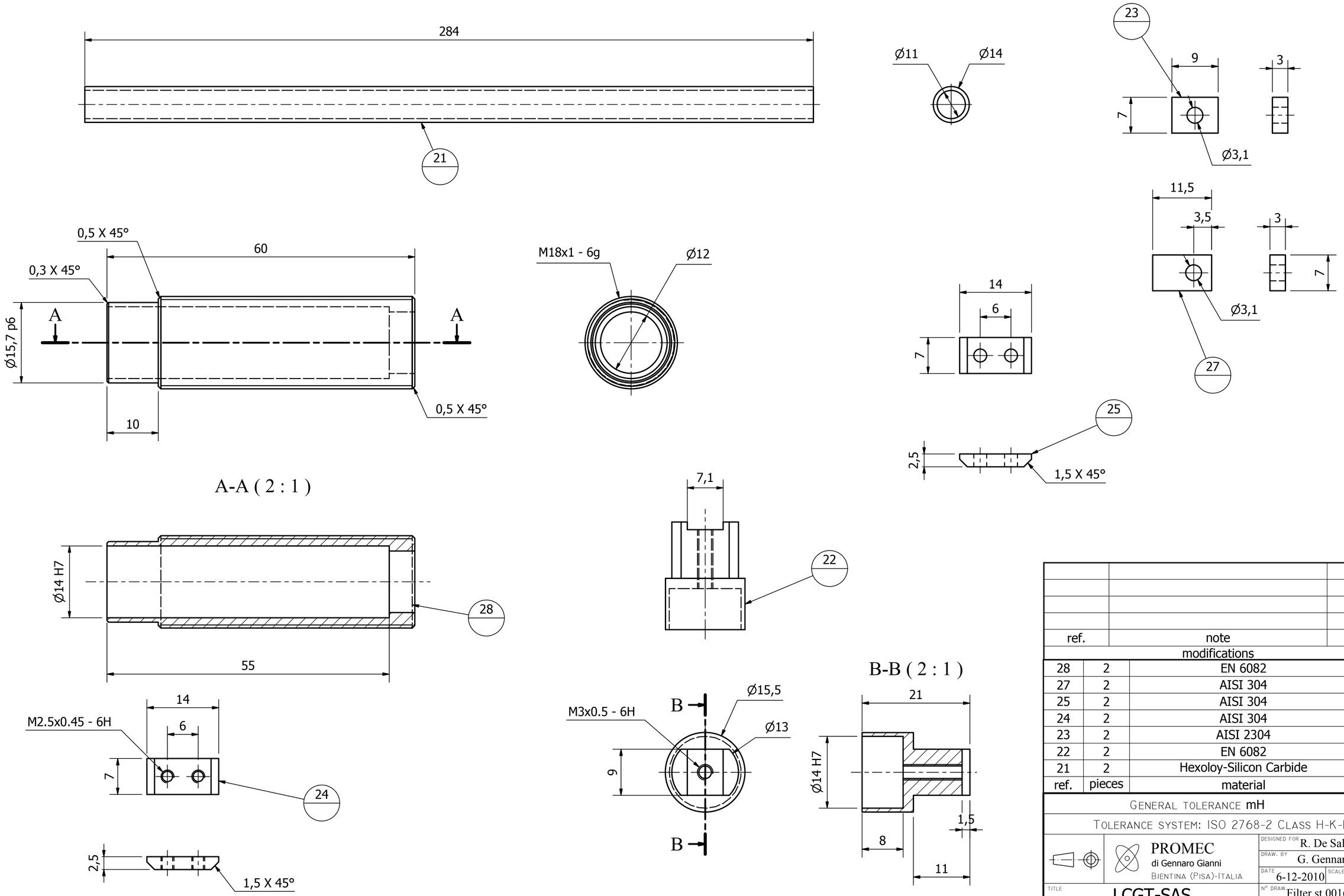

ref.		note	date

modifications

ref.	pieces	material	scale
28	2	EN 6082	1:1
27	2	AISI 304	1:1
25	2	AISI 304	1:1
24	2	AISI 304	1:1
23	2	AISI 2304	1:1
22	2	EN 6082	1:1
21	2	Hexoloy-Silicon Carbide	1:1

GENERAL TOLERANCE mH

TOLERANCE SYSTEM: ISO 2768-2 CLASS H-K-L

PROMEC
di Gennaro Gianni
BIENTINA (PISA)-ITALIA

DESIGNED FOR: R. De Salvo
DRAW. BY: G. Gennaro
DATE: 6-12-2010
SCALE: 1:1
N° DRAW: Filter st.0016-00
REPLACE DRAW N°:
DETAIL FROM: 0002
A2

TITLE
LCGT-SAS
FILTER STANDARD-Gr.1
DETAILS BALANCE

Elenco parti			
ELEMENTO	QTÀ	NUMERO PARTE	DESCRIZIONE
4	8	ISO 4762 - M3 x 8	Viti con esagono incassato - Grado prodotto A
8	4	ISO 4762 - M4 x 10	Viti con esagono incassato - Grado prodotto A
11	36	ISO 4762 - M10 x 25	Viti con esagono incassato - Grado prodotto A
15	12	ISO 4762 - M3 x 12	Viti con esagono incassato - Grado prodotto A
28	4	ISO 7045 - M2,5 x 6 - 4.8 - H	Vite a testa bombata con impronta a croce di tipo H - Grado prodotto A
32	4	ISO 7092 - ST 4 - 140 HV	Rondelle piatte - Serie piccola - Grado prodotto A
33	16	ISO 4762 - M4 x 12	Viti con esagono incassato - Grado prodotto A
34	4	ISO 4035 - M4	Dado esagonale
39	4	ISO 4762 - M4 x 6	Viti con esagono incassato - Grado prodotto A
40	6	ISO 4762 - M6 x 35	Viti con esagono incassato - Grado prodotto A
41	4	ISO 4762 - M4 x 8	Viti con esagono incassato - Grado prodotto A
43	48	ISO 4762 - M10 x 30	Viti con esagono incassato - Grado prodotto A
48	6	ISO 4032 - M8	Dado esagonale
54	4	ISO 4762 - M6 x 30	Viti con esagono incassato - Grado prodotto A
55	6	ISO 4032 - M6	Dado esagonale
57	6	ISO 4762 - M5 x 35	Viti con esagono incassato - Grado prodotto A
58	16	ISO 4762 - M8 x 25	Viti con esagono incassato - Grado prodotto A
64	4	ISO 4762 - M6 x 16	Viti con esagono incassato - Grado prodotto A

Stainless steel screws silver plated

PROMEC
di Gennaro Gianni
BIENTINA (PISA)-ITALIA

TITLE
LCGT-SAS
FILTER STANDARD-Gr.1
SCREW'S LIST

DESIGNED FOR: R. De Salvo
DESIGN: G. Gennaro
DATE: 6-12-2010
SCALE:
ASS. NUMB.: Filter st.0017-00
REPLACE DRAW.N°:
A3

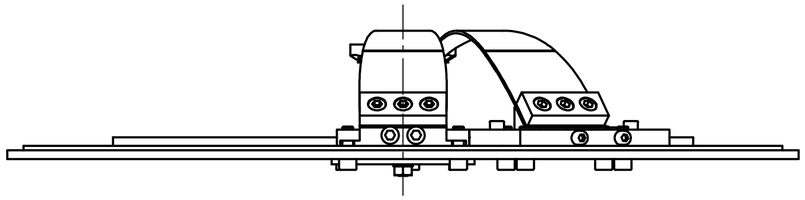

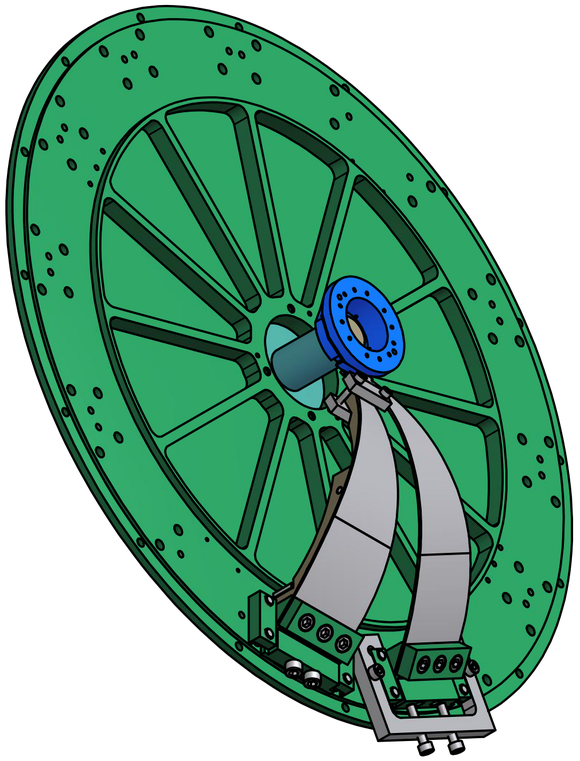

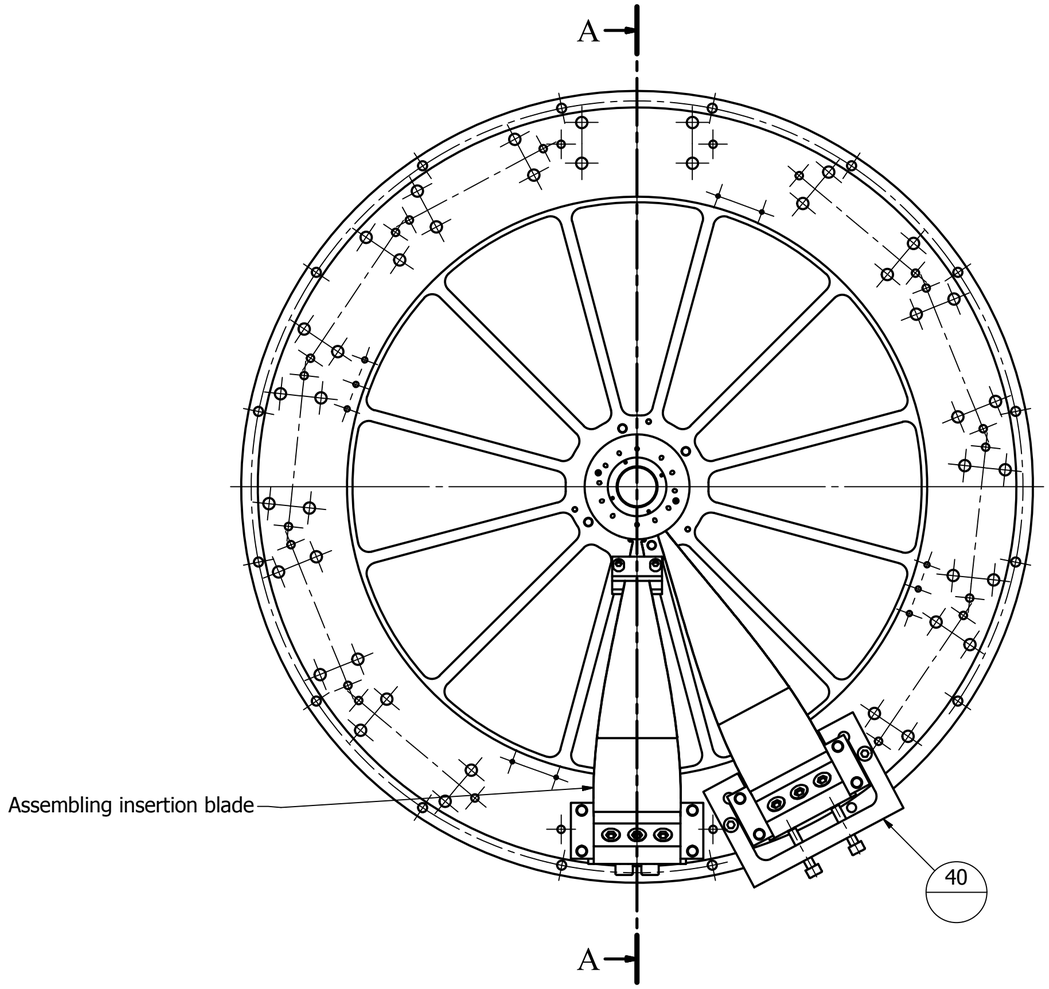

A-A (1 : 4)

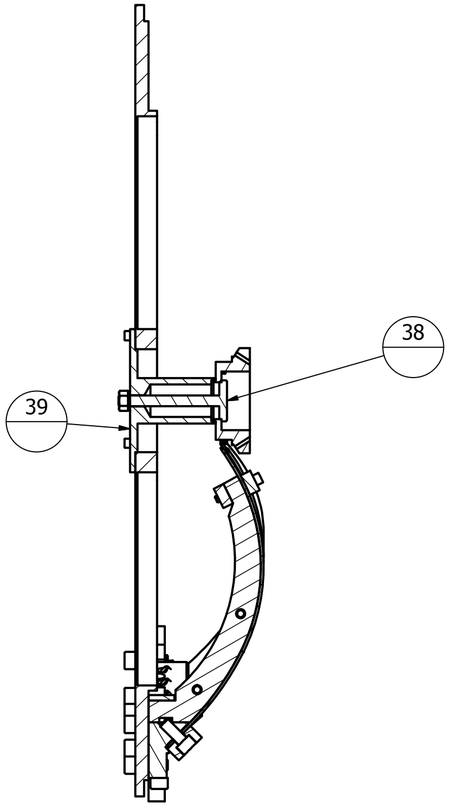

ref.	note	date
	modifications	

ref.	draw.	legend
40	0020	Pusher blade tool
39	0020	Fixing clamp tip blade
38	0020	Tie rod
	0019	Assembling insertion blade

PROMEC
di Gennaro Gianni
BIENTINA (PISA)-ITALIA

TITLE
LCGT-SAS
FILTER STANDARD-Gr.1
ASSEMBLING TOOL

DESIGNED FOR: R. De Salvo
DESIGN: G. Gennaro
DATE: 6-12-2010
SCALE: 1:4
ASS. NUMBER: Filter st.0018-00
REPLACE DRAW.N°:
A2

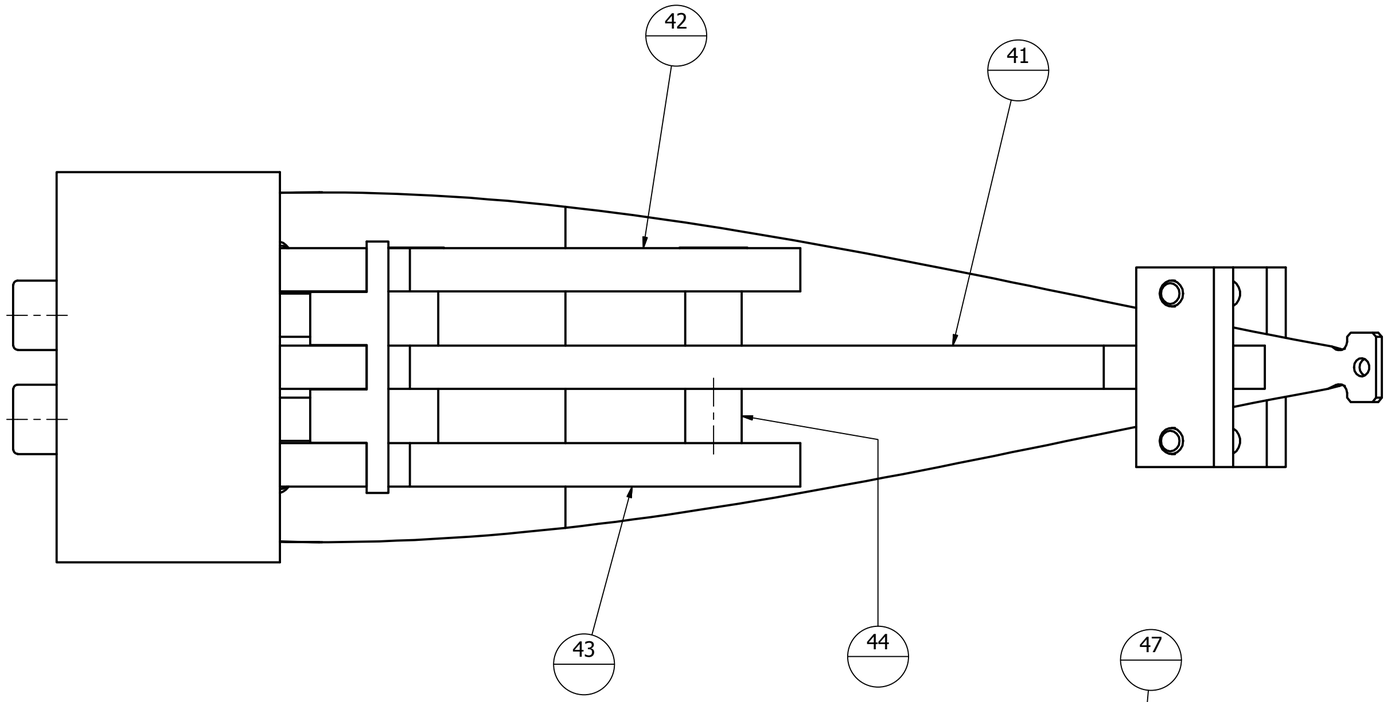

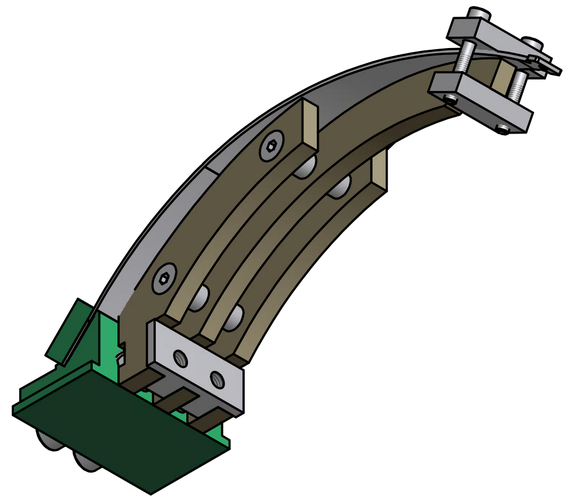

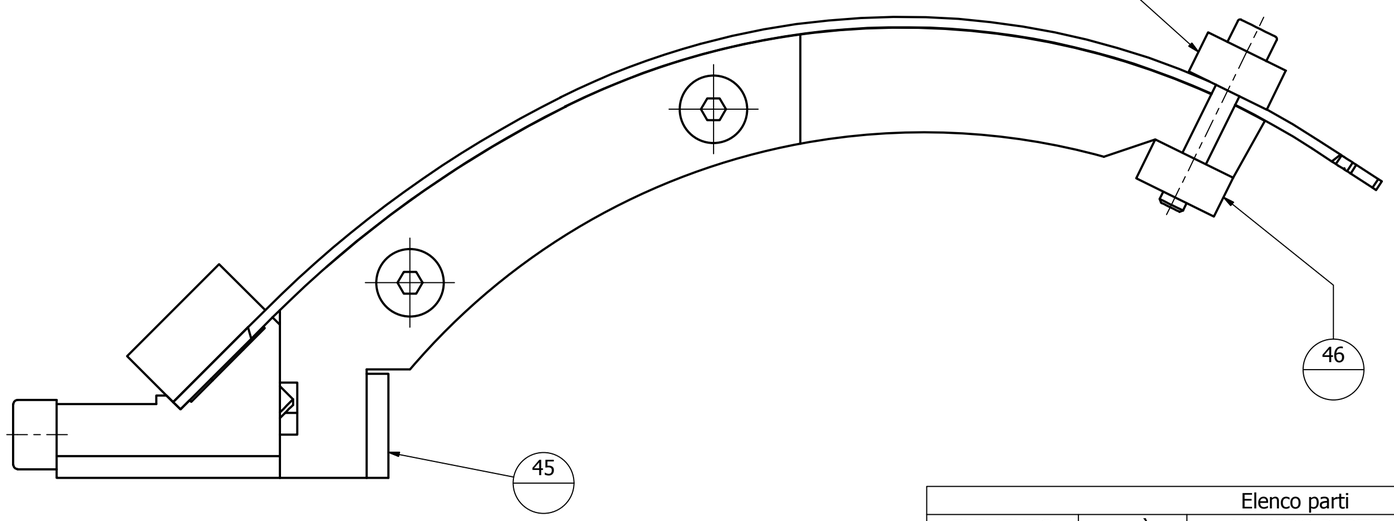

SEE DRAWING 0018

ref.	note	date

modifications

ref.	draw.	legend
47	0022	Clamp tip blade
46	0022	Clamp tip blade
45	0022	Blade clamp
44	0022	Spacer
43	0021	Lateral curve gauge
42	0021	Lateral curve gauge
41	0021	Central curve gauge

Elenco parti

ELEMENTO	QTÀ	NUMERO PARTE	DESCRIZIONE
5	2	ISO 4762 - M6 x 40	Viti con esagono incassato - Grado prodotto A
6	2	ISO 5933 - M10 x 70	Viti svasata con esagono incassato
10	3	ISO 4762 - M10 x 25	Viti con esagono incassato - Grado prodotto A

PROMEC
di Gennaro Gianni
BIENTINA (PISA)-ITALIA

TITLE
LCGT-SAS
FILTER STANDARD-Gr1
ASSEMBLING INSERTION BLADE

DESIGNED FOR: R. De Salvo
DESIGN: G. Gennaro
DATE: 6-12-2010
SCALE: 1:1
ASS. NUMBER: Filter st.0019-00
REPLACE DRAW.N°:
A2

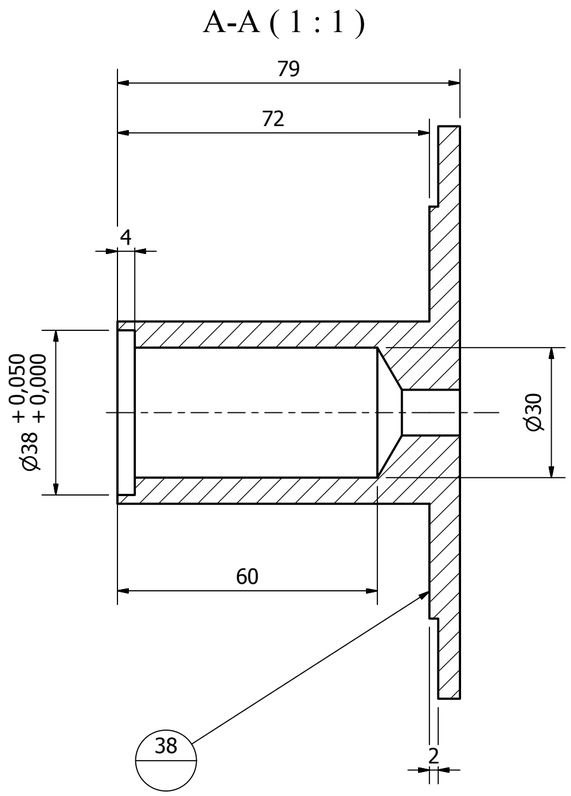

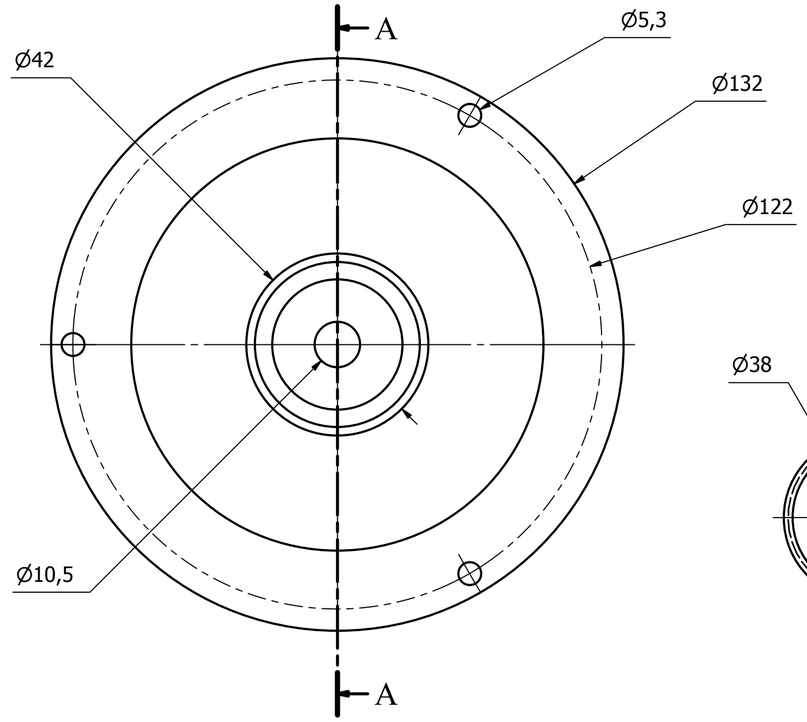

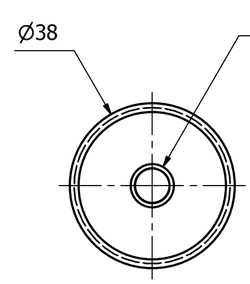

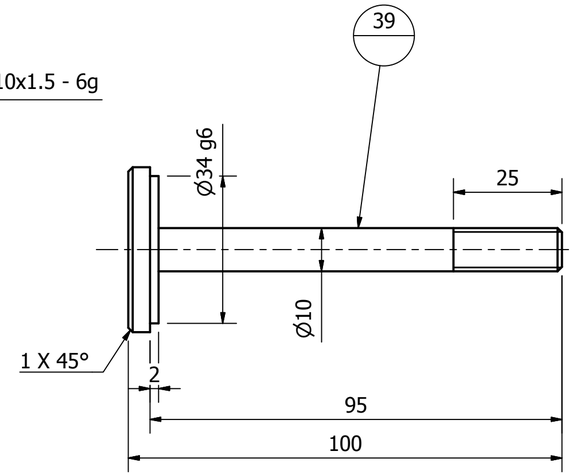

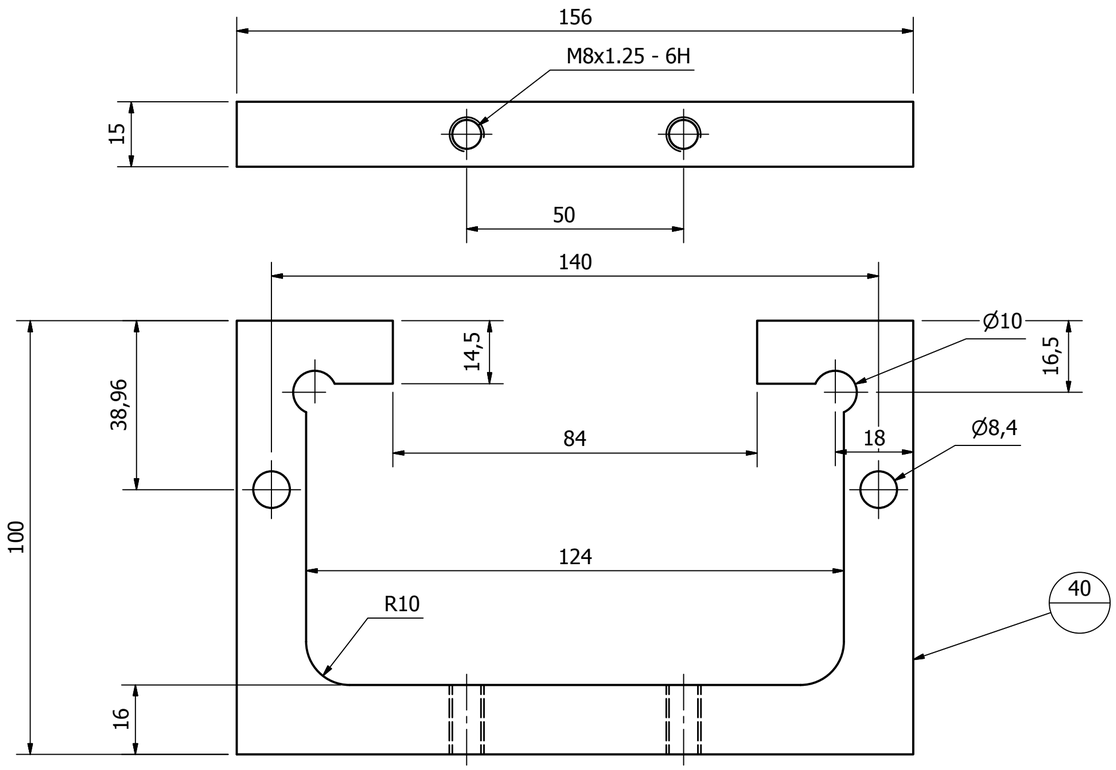

ref.	note	date
	modifications	

ref.	pieces	material	scale
40	2	AISI 304	1:1
39	1	AISI 304	1:1
38	1	EN 6082	1:1

GENERAL TOLERANCE mK

TOLERANCE SYSTEM: ISO 2768-2 CLASS H-K-L

PROMEC
di Gennaro Gianni
BIENTINA (PISA)-ITALIA

DESIGNED FOR R. De Salvo
DRAW. BY G. Gennaro
DATE 6-12-2010
SCALE 1:1

TITLE
LCGT-SAS
FILTER STANDARD-Gr.1
DETAILS TOOL

N° DRAW Filter st.0020-00
REPLACE DRAW N°
DETAIL FROM 0018
A2

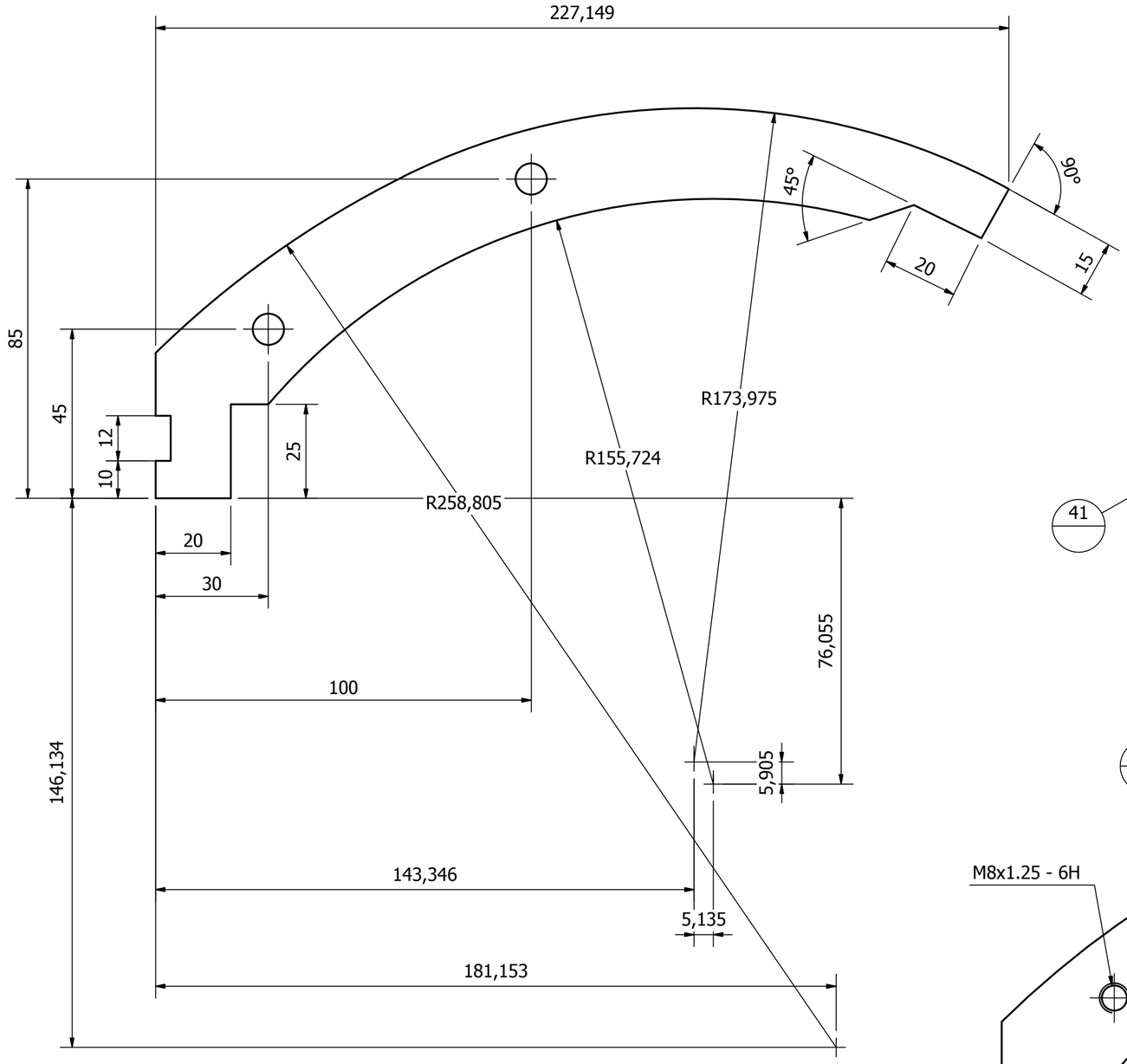

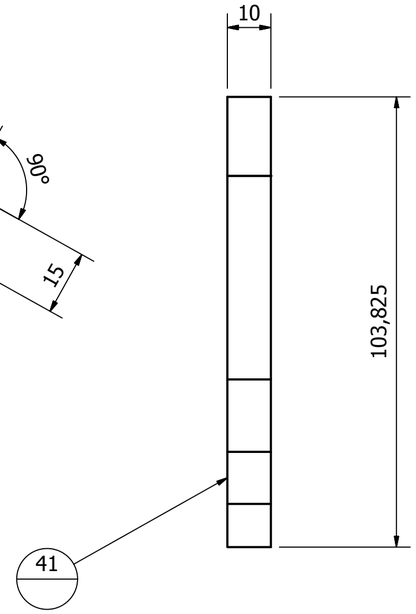

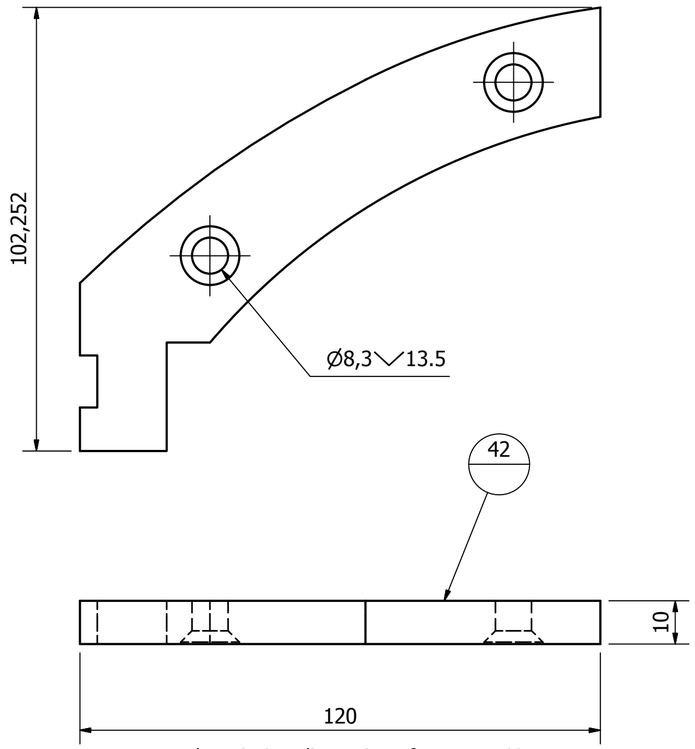

take missing dimensions from part 41

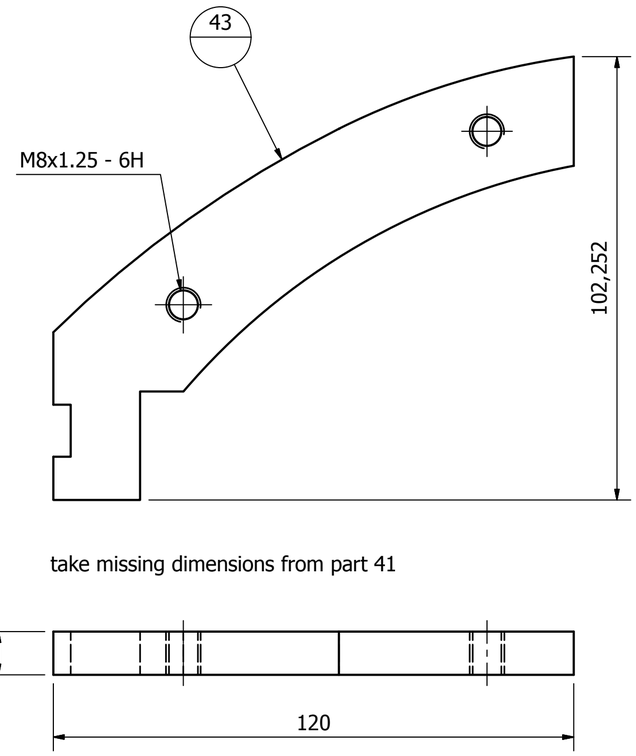

take missing dimensions from part 41

ref.	note	date
modifications		

ref.	pieces	material	scale
43	2	EN 6082 T6	1:1
42	2	EN 6082 T6	1:1
41	2	EN 6082 T6	1:1

GENERAL TOLERANCE mH

TOLERANCE SYSTEM: ISO 2768-2 CLASS H-K-L

PROMEC
di Gennaro Gianni
BIENTINA (PISA)-ITALIA

DESIGNED FOR: R. De Salvo
DRAW. BY: G. Gennaro
DATE: 7-12-2010
SCALE: 1:1
N° DRAW.: Filter st.0021-00
REPLACE DRAW N°:
DETAIL FROM: 0019
A2

TITLE
LCGT-SAS
FILTER STANDARD-Gr.1
DETAILS INSERTION BLADE

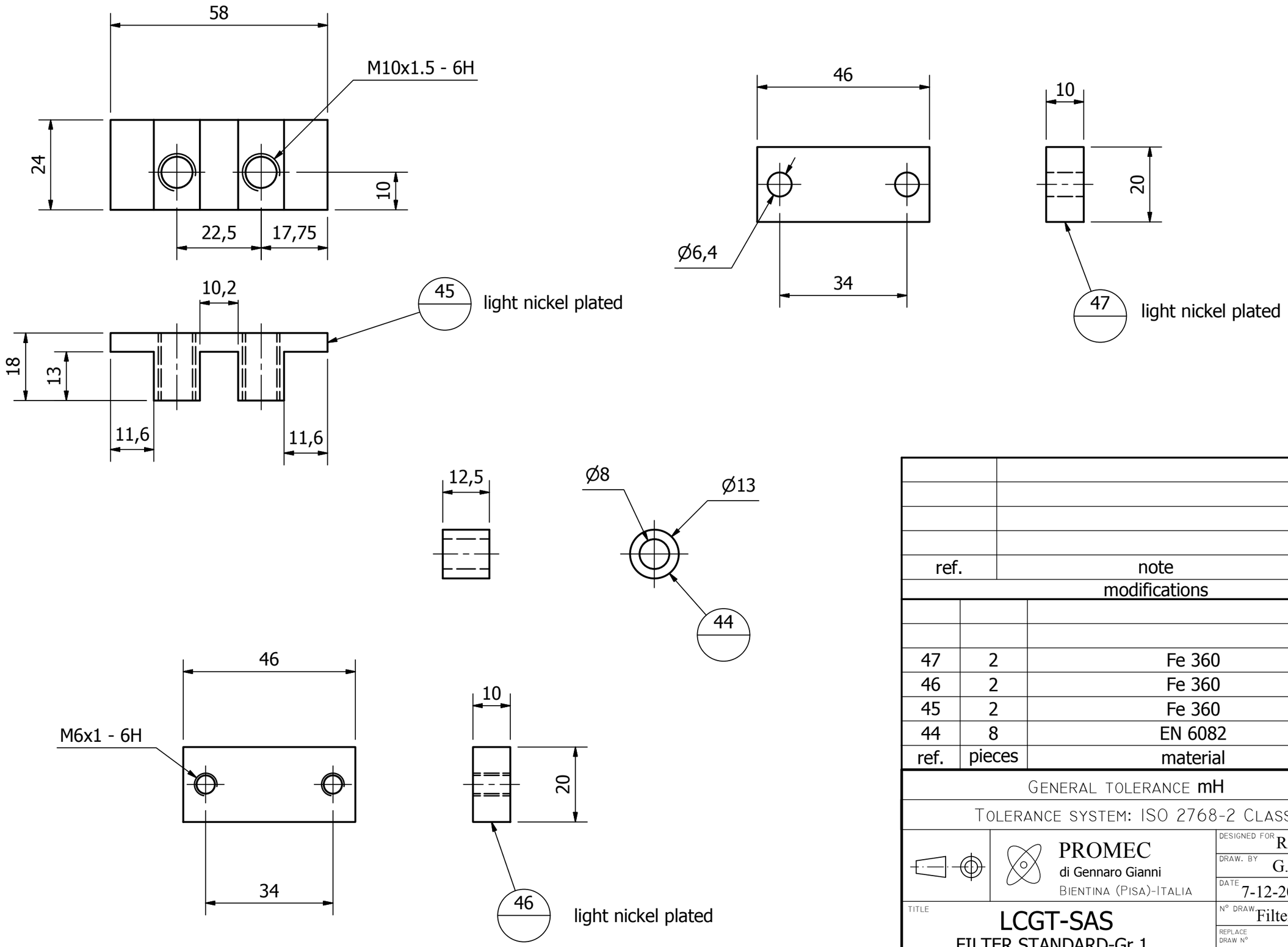

ref.	note	date
	modifications	

ref.	pieces	material	scale
47	2	Fe 360	1:1
46	2	Fe 360	1:1
45	2	Fe 360	1:1
44	8	EN 6082	1:1

GENERAL TOLERANCE mH

TOLERANCE SYSTEM: ISO 2768-2 CLASS H-K-L

PROMEC
di Gennaro Gianni
BIENTINA (PISA)-ITALIA

DESIGNED FOR R. De Salvo
DRAW. BY G. Gennaro
DATE 7-12-2010
SCALE 1:1
N° DRAW. Filter st.0022-00
REPLACE DRAW N°
DETAIL FROM 0019
A3

TITLE
LCGT-SAS
FILTER STANDARD-Gr.1
DETAILS ISERTION BLADE

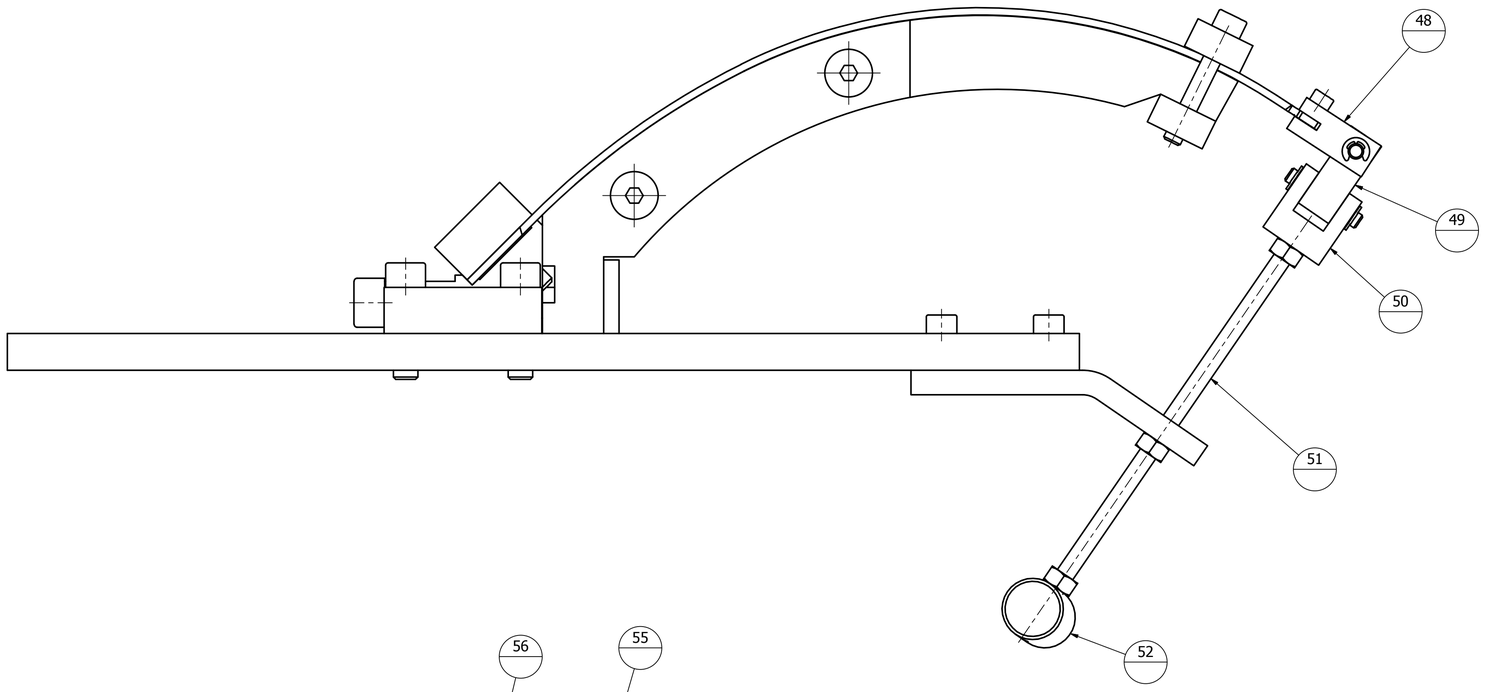

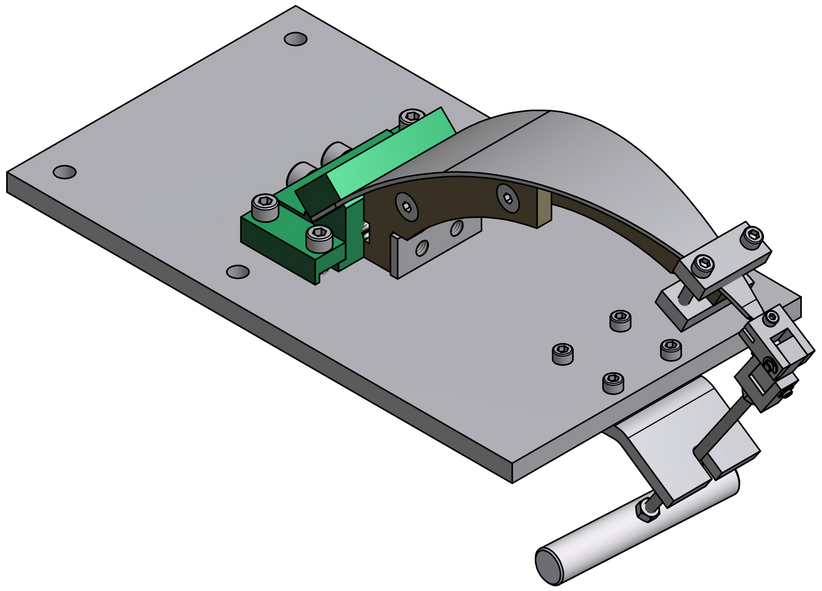

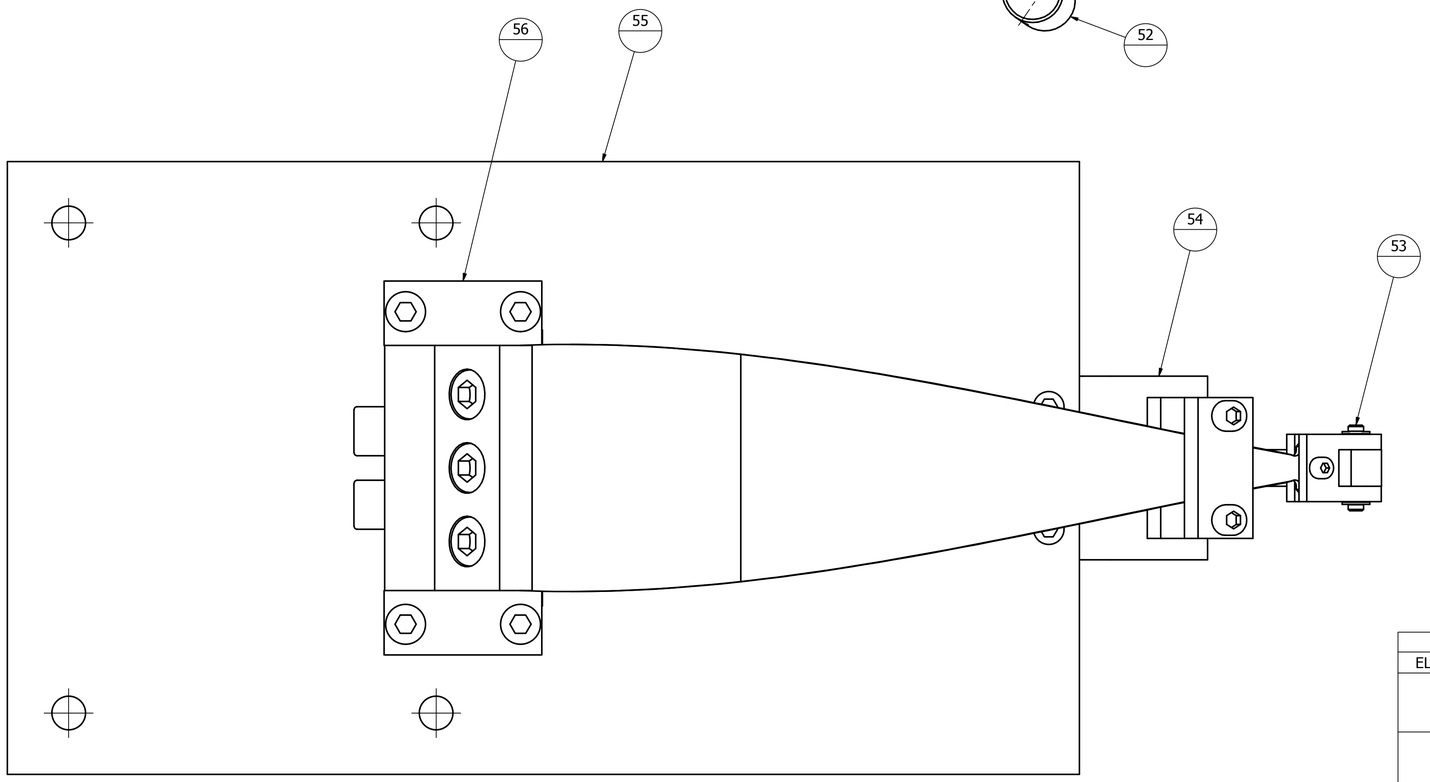

ref.	note	date
	modifications	

56	0025	Guide
55	0024	Support base
54	0024	Fork stop block
53	0025	Axis ratation
52	0024	Handle
51	0024	Tie rod
50	0025	Rotary jar
49	0025	Rotary jar
48	0025	Clamp for bending blade
ref.	draw.	legend

Elenco parti

ELEMENTO	QTÀ	NUMERO PARTE	DESCRIZIONE
3	4	ISO 4762 - M6 x 20	Viti con esagono incassato - Grado prodotto A
11	1	ISO 4762 - M4 x 12	Viti con esagono incassato - Grado prodotto A
12	4	ISO 4762 - M8 x 30	Viti con esagono incassato - Grado prodotto A
13	4	UNI 7434-75 - 4	Rondella di arresto
15	3	ISO 4032 - M6	Dado esagonale

PROMEC
di Gennaro Gianni
BIENTINA (PISA)-ITALIA

DESIGNED FOR: R. De Salvo
DESIGN: G. Gennaro
DATE: 7-12-2010
SCALE: 1:1
ASS. NUMB: Filter st.0023-00
REPLACE DRAW.N°:
A1

TITLE
LCGT-SAS
FILTER STANDARD-Gr.1
ASSEMBLING MOUNTING BLADE TOOL

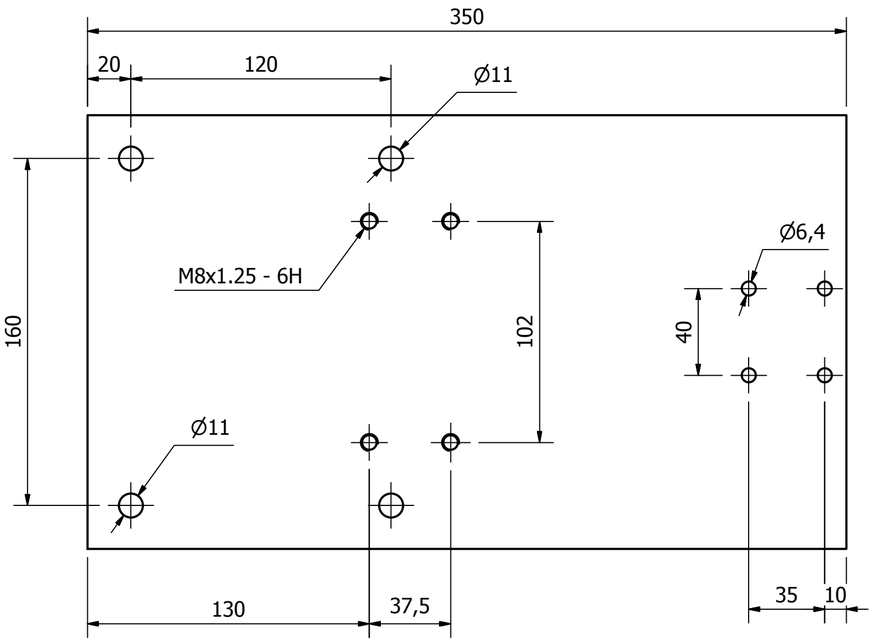

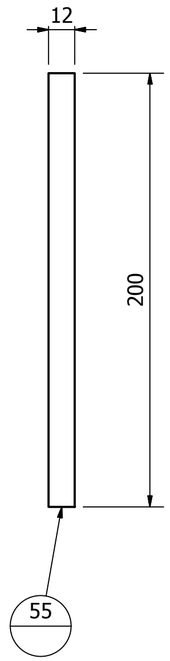

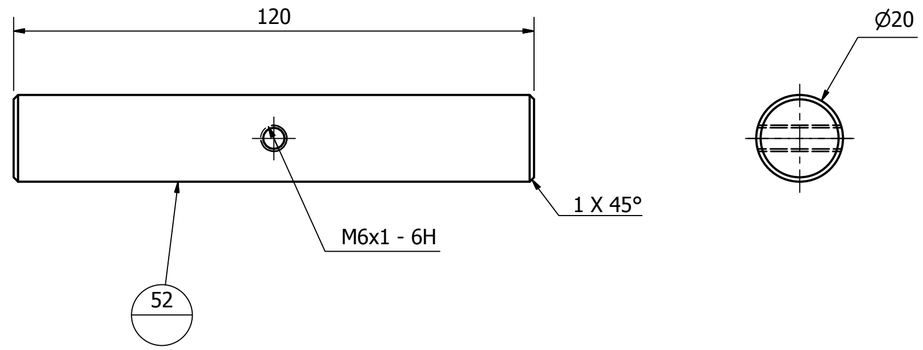

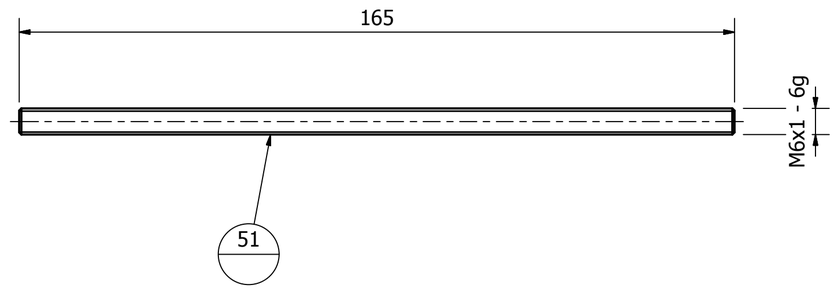

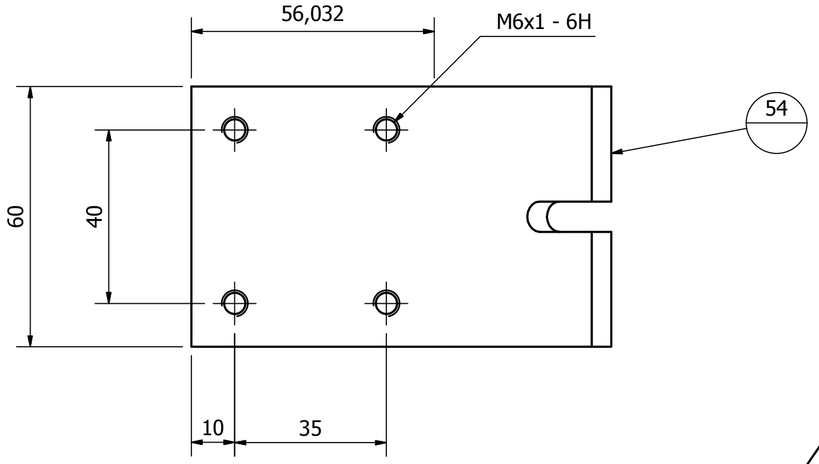

A (1 : 1)

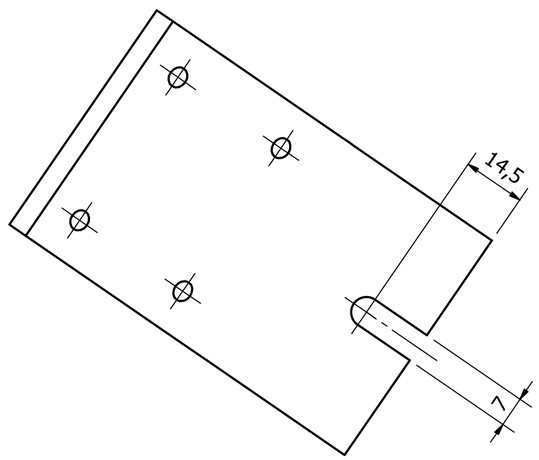

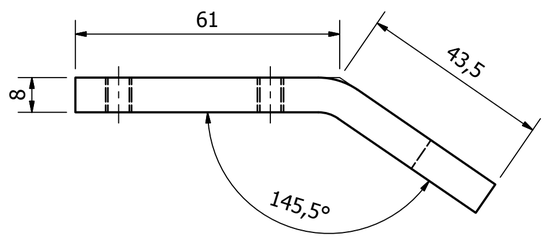

A

ref.	note	date
	modifications	

ref.	pieces	material	scale
55	2	AISI 304	1:2
54	2	AISI 304	1:1
52	2	EN 6082	1:1
51	2	AISI 316	1:1

GENERAL TOLERANCE mH

TOLERANCE SYSTEM: ISO 2768-2 CLASS H-K-L

PROMEC
di Gennaro Gianni
BIENTINA (PISA)-ITALIA

DESIGNED FOR: R. De Salvo
DRAW. BY: G. Gennaro
DATE: 7-12-2010
SCALE: 1:1
N° DRAW.: Filter st.0024-00
REPLACE DRAW N°:
DETAIL FROM: 0023
A2

TITLE
LCGT-SAS
FILTER STANDARD-Gr.1
DETAILS MOUNTING BLADE TOOL

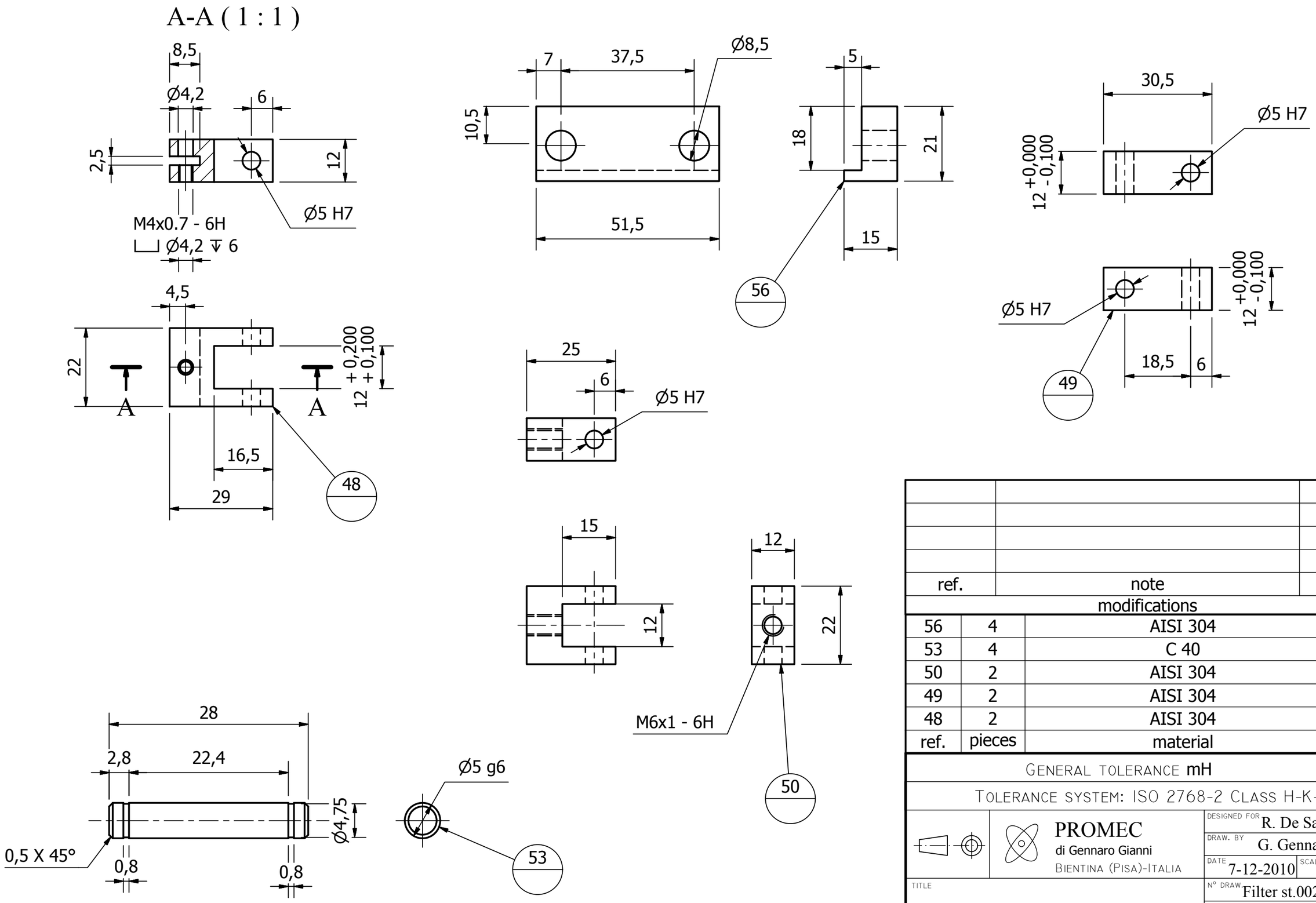

ref.	note	date
	modifications	

ref.	pieces	material	scale
56	4	AISI 304	1:1
53	4	C 40	2:1
50	2	AISI 304	1:1
49	2	AISI 304	1:1
48	2	AISI 304	1:1

GENERAL TOLERANCE mH

TOLERANCE SYSTEM: ISO 2768-2 CLASS H-K-L

PROMEC
di Gennaro Gianni
BIENTINA (PISA)-ITALIA

TITLE

DESIGNED FOR R. De Salvo
DRAW. BY G. Gennaro
DATE 7-12-2010
SCALE 1:1
N° DRAW Filter st.0025-00
REPLACE DRAW N°
DETAIL FROM 0023
A3

A-A (1 : 1)

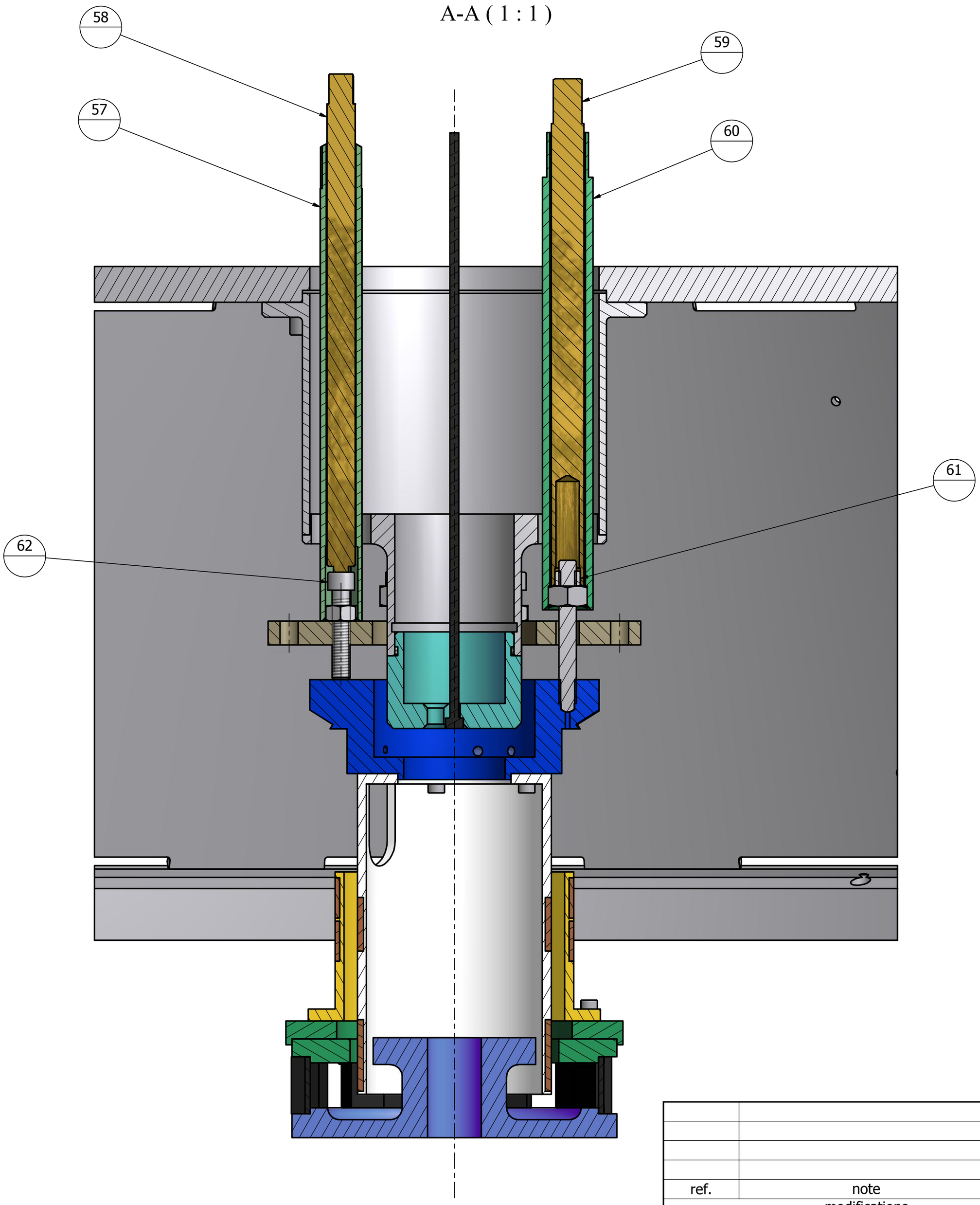

ref.	note	date

modifications

ref.	draw.	legend
62	0027	Upper lock keystone
61	0027	Little nut
60	0027	Lower regulation stroke keystone 1
59	0027	Lower regulation stroke keystone 2
58	0027	Upper regulation stroke keystone 1
57	0027	Upper regulation stroke keystone 2

PROMEC
di Gennaro Gianni
Bientina (Pisa)-Italia

TITLE
LCGT-SAS
FILTER STANDARD-Gr.1
TOOL KEY

DESIGNED FOR: R. De Salvo
DESIGN: G. Gennaro
DATE: 10-12-2010
SCALE: 1:1
ASS. NUMB.: Filter st.0026-00
REPLACE DRAW.N°:
A2

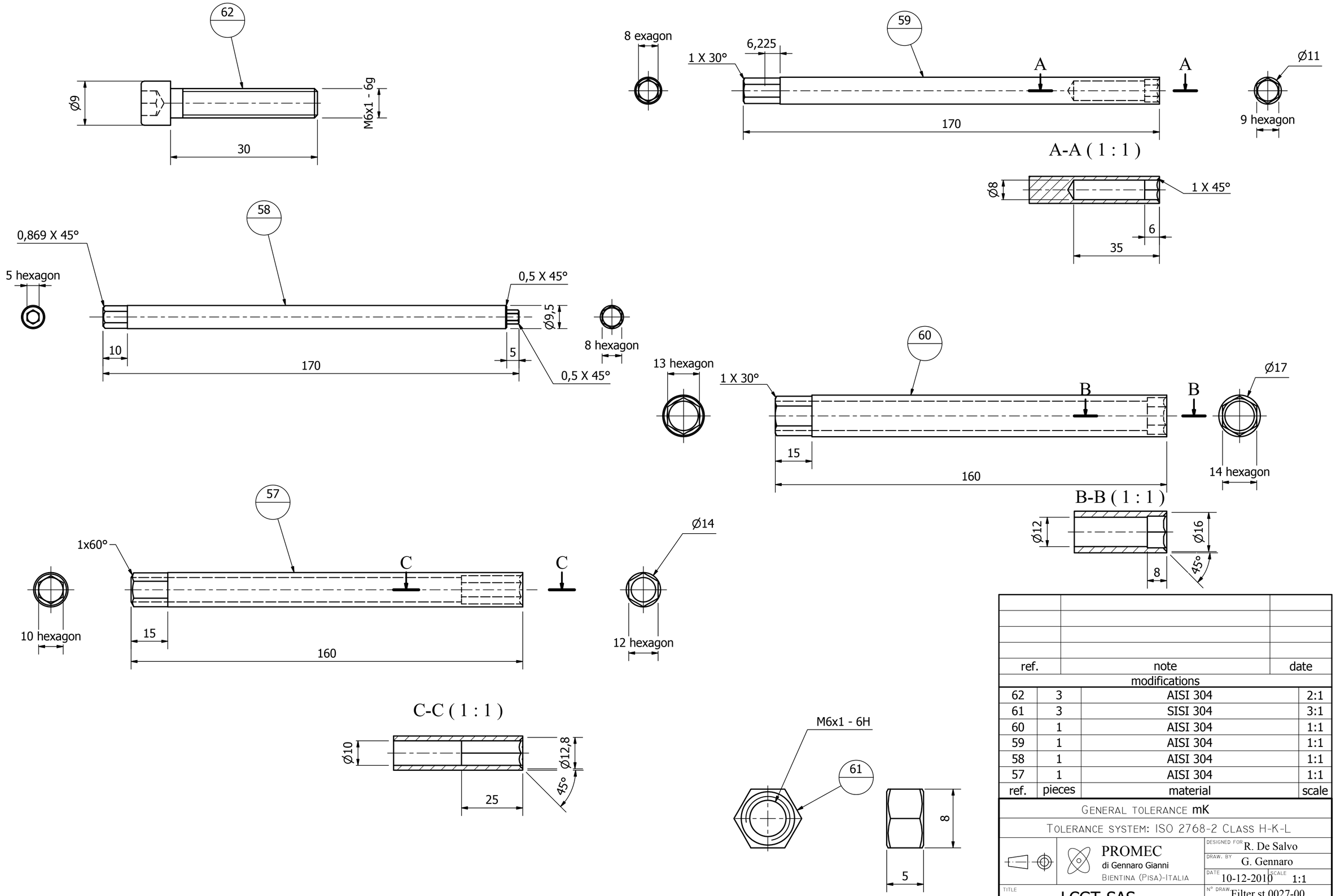

ref.	note	date
	modifications	

ref.	pieces	material	scale
62	3	AISI 304	2:1
61	3	SISI 304	3:1
60	1	AISI 304	1:1
59	1	AISI 304	1:1
58	1	AISI 304	1:1
57	1	AISI 304	1:1

GENERAL TOLERANCE mK

TOLERANCE SYSTEM: ISO 2768-2 CLASS H-K-L

PROMEC
di Gennaro Gianni
BIENTINA (PISA)-ITALIA

DESIGNED FOR R. De Salvo
DRAW. BY G. Gennaro
DATE 10-12-2010
SCALE 1:1
N° DRAW Filter st.0027-00
REPLACE DRAW N°
DETAIL FROM 0026
A2

TITLE
LCGT-SAS
FILTER STANDARD-Gr.1
DETAILS KEY