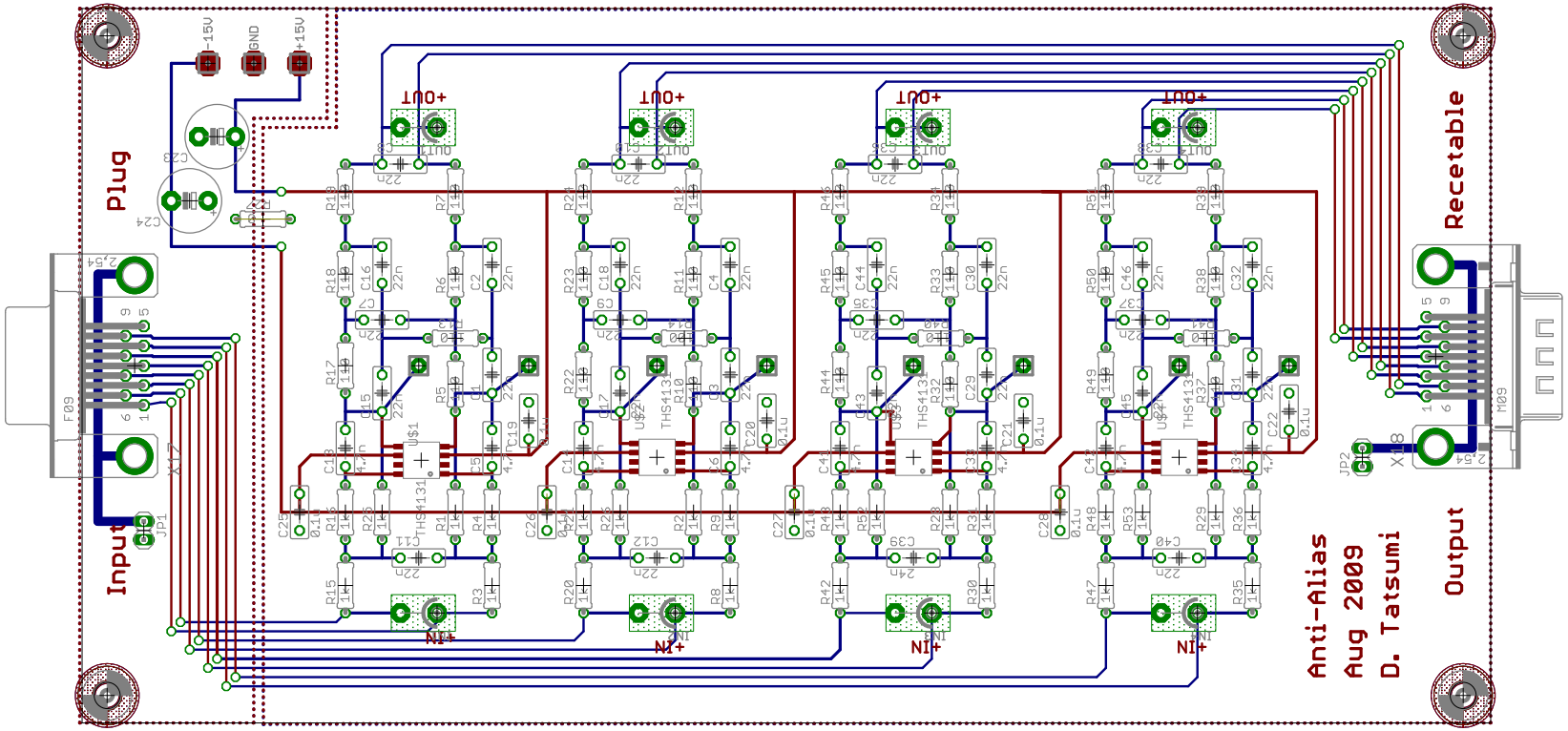

2009/08/19 17:50:11 C:\Documents and Settings\tatsu.WHITEHOLE\My Documents\eagle\CLIO\AntiAlias\clio_aa_unit.brd